12

BUTTERFLY VALVES

STANDARD PERFORMANCE -HS(U) SERIES
HIGH PERFORMANCE -SHP SERIES

- Standard and high performance butterfly valves to meet the wide range of commercial and industrial HVAC applications.
- Advanced seat and disc design(s) provide a bubble tight shutoff capability at each valve's rated temperature/pressure while maintaining a low seating torque.
- Belimo standard and industrial NEMA 4 actuators to ensure control in a variety of environments.
- Incorporates a five bushing design to completely isolate the valve shaft from the body that results in better control.
- Stainless steel disc and shaft are standard for superior strength, durability and long lasting operation.

Applications

The comprehensive line of butterfly valves is available in sizes 2" to 30" and fullfills the requirement of commercial and industrial HVAC applications requiring positive shutoff for liquids. Applications include chiller isolation, cooling tower isolation, change-over systems, large air handler coil control and bypass including related process control.

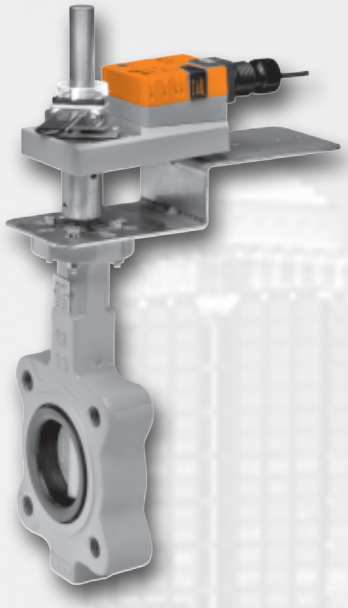

Butterfly Valve Nomenclature

F6	50	HS	SY2	-24	MFT	

Valve
F6 = 2-way
F7 = 3-way

Valve Size
50-750 = 2" to 30"

Trim Material
HSU = Stainless Disc, Cast Iron Full Lug Body, EPDM Liner, Bubble Tight Close-Off to 50 psi
HS = Stainless Disc, Cast Iron Full Lug Body, EPDM Liner, Bubble Tight Close-Off to 200 psi (2" to 12"), 150 psi (14"+)
-150SHP = ANSI Class 150, Stainless Disc, Cast Steel Full Lug Body, RPTFE Seat, Bubble Tight Close-off up to 285 psi
-300SHP = ANSI Class 150, Stainless Disc, Cast Steel Full Lug Body, RPTFE Seat, Bubble Tight Close-off up to 600 psi

Actuator Type
Non-Spring Return
GMB(X)
SY…
Spring Return
AF…

Power Supply
-24 = 24 VAC/DC
-110 = 110/120 VAC
-120 = 120 VAC
-230 = 230 VAC

Control
Blank = On/Off
-3X1 = On/Off, Floating Point
MFT or MFTX1 = Multi-Function Technology

-S = Built-in Auxiliary Switch

Ordering Example

1 Choose the valve actuator combination.

F650HS+SY2-24MFT

2 Specify preference or configuration.

3 **For MFT orders only - select programming code (consult factory)**

+NO **+Tagging (if needed)**

4 Does order require tagging?

2-way Preference

Non-Spring Return	2 Pos.		Set Up Required Field Logic Determines Normal Position
Non-Spring Return	Modulating	NC	(Normally Closed) 1 VDC/2 VDC/4mA = Closed
Non-Spring Return	Modulating	NO	(Normally Open) 1 VDC/2 VDC/4mA = Open
Spring Return		NO/FO	(Normally Open/Fail Open) Field Logic Determines Normal Position Spring Fails Valve OPEN
Spring Return		NC/FC	(Normally Closed/Fail Closed) Field Logic Determines Normal Position Spring Fails Valve CLOSED
Spring Return		NO/FO	(Normally Open/Fail Open) 1 VDC/2 VDC/4mA = Open Spring Fails Valve OPEN
Spring Return		NO/FC	(Normally Open/Fail Closed) 1 VDC/2 VDC/4mA = Open Spring Fails Valve CLOSED
Spring Return		NC/FO	(Normally Closed/Fail Open) 1 VDC/2 VDC/4mA = Closed Spring Fails Valve OPEN
Spring Return		NC/FC	(Normally Closed/Fail Closed) 1 VDC/2 VDC/4mA = Closed Spring Fails Valve CLOSED

Set-Up

3-way Configuration

Non-Spring Return	2 Pos.	Specify Flow Pattern [10-35]	No Set Up Required Field Logic Determines Normal Position
Non-Spring Return	Modulating	Specify Flow Pattern [10-35]	Master (Actuated) Valve NC (Normally Closed) 1 VDC/2 VDC/4mA = Closed
Non-Spring Return	Modulating	Specify Flow Pattern [10-35]	Master (Actuated) Valve NO (Normally Open) 1 VDC/2 VDC/4mA = Open
Spring Return	Modulating 2 Pos.	Specify Flow Pattern [10-35]	NO/FO (Normally Open/Fail Open) Field Logic Determines Normal Position Spring Fails Master Valve OPEN
Spring Return	Modulating 2 Pos.	Specify Flow Pattern [10-35]	NC/FC (Normally Closed/Fail Closed) Field Logic Determines Normal Position Spring Fails Master Valve CLOSED
Spring Return	Modulating 2 Pos.	Specify Flow Pattern [10-35]	NO/FO (Normally Open/Fail Open) 1 VDC/2 VDC/4mA = Master Valve Open Spring Fails Master Valve OPEN
Spring Return	Modulating 2 Pos.	Specify Flow Pattern [10-35]	NO/FC (Normally Open/Fail Closed) 1 VDC/2 VDC/4mA = Maser Valve Open Spring Fails Master Valve CLOSED
Spring Return	Modulating 2 Pos.	Specify Flow Pattern [10-35]	NC/FO (Normally Closed/Fail Open) 1 VDC/2 VDC/4mA = Master Valve Closed Spring Fails Master Valve OPEN
Spring Return	Modulating 2 Pos.	Specify Flow Pattern [10-35]	NC/FC (Normally Closed/Fail Closed) 1 VDC/2 VDC/4mA = Master Valve Closed Spring Fails Master Valve CLOSED

Tagging:
Valves may be tagged per customer specification. ($10.00 per tag)

Example:
Chiller 1
3rd Floor East

Part number for tagging: 99981-00101

5 Complete Ordering Example:

F650HS+SY2-24MFT+NO +ACE

Consult factory

Control Valve Product Range

Electronic Butterfly Valve Product Range
Standard Performance – Resilient Seat, 2-way and 3-way Valves

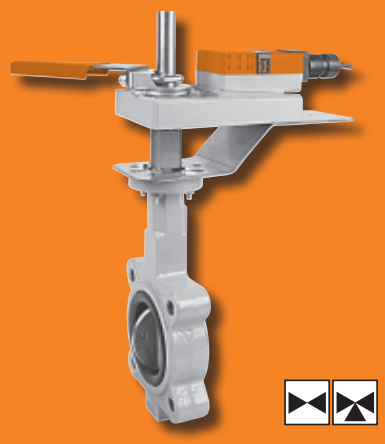

		2-way			Suitable Actuators							
		Valve Nominal Size		Type	Spring Return		Non-Spring Return					
C_V 90°	C_V 60°	IN	DN [mm]	2-way	HSU	HS	HSU	HS	HSU	HS	HSU	HS
115	44	2”	50	F650HS(U)	AF Series	AF Series	AM Series	AM			SY Series	SY Series
196	75	2½”	65	F665HS(U)								
302	116	3”	80	F680HS(U)						GM		
600	230	4”	100	F6100HS(U)					GM			
1022	392	5”	125	F6125HS(U)								
1579	605	6”	150	F6150HS(U)								
3136	1202	8”	200	F6200HS(U)								
5340	2047	10”	250	F6250HS(U)								
8250	3162	12”	300	F6300HS(U)								
11917	4568	14”	350	F6350HS								
16388	6282	16”	400	F6400HS								
21705	8320	18”	450	F6450HS								
27908	10698	20”	500	F6500HS								
43116	16528	24”	600	F6600HS								
73426	28146	30”	750	F6750HS								

		3-way			Suitable Actuators							
		Valve Nominal Size		Type	Spring Return		Non-Spring Return					
C_V 90°	C_V 60°	IN	DN [mm]	3-way	HSU	HS	HSU	HS	HSU	HS	HSU	HS
115	44	2”	50	F750HS(U)	AF Series	AF Series	AM	AM		GM Series	SY Series	SY Series
196	75	2½”	65	F765HS(U)								
302	116	3”	80	F780HS(U)								
600	230	4”	100	F7100HS(U)					GM Series			
1022	392	5”	125	F7125HS(U)								
1579	605	6”	150	F7150HS(U)								
3136	1202	8”	200	F7200HS(U)								
5340	2047	10”	250	F7250HS(U)								
8250	3162	12”	300	F7300HS(U)								
11917	4568	14”	350	F7350HS								
16388	6282	16”	400	F7400HS								
21705	8320	18”	450	F7450HS								
27908	10698	20”	500	F7500HS								
43116	16528	24”	600	F7600HS								

Applications
These valves are designed to meet the needs of commercial and industrial HVAC applications requiring positive shutoff for liquids. Applications include chiller isolation, cooling tower isolation, change-over systems, large air handler coil control and bypass including related process control.

Mode of Operation
Butterfly valves allow higher flows with relatively low pressure loss from the valves, and are typically used for isolation or flow control for valve openings between 30 to 70 degrees of full open. At valve openings greater than 70 degrees, the pressure loss of a butterfly valve is too low to produce any significant effect on flow or the energy loss of a flow system. Butterfly valves can be controlled with a maintenance-free electronic actuator or manually with an ergonomic, wear-free plastic handle or gear operator.

Product Features
The unique disc and seat design ensures positive valve seating while maintaining low seating torque.

Actuator Specifications

Control type	On/Off, Floating Point, Proportional, 2-10 VDC Multi-Function Technology (MFT)
Manual override	all models
Electrical connection	3 ft [1m] cable with ½” conduit fitting, 2 (½”) conduits (SY)

Valve Specifications

Service	chilled or hot water, 60% glycol
Flow characteristic	F6 modified equal percentage F7 modified linear
Action	90° rotation
Sizes	2” to 30”
Type of end fitting	ANSI Class 125/150 lb. flanged
Materials	
Body	cast iron
Disc	304 stainless steel
Seat	EPDM
Body pressure	ASME/ANSI Class 125
Shaft	416 stainless steel
Media temp range	-22°F to 250°F (-30°C to 120°C)
Close-off pressure	HSU: 50 psi HS: 200 psi, 2” to 12” 150 psi, 14” to 30”
Leakage	bubble tight shut-off

K20945 - 04/09 - Subject to change. © Belimo Aircontrols (USA), Inc.

Control Valve Product Range

Electronic Butterfly Valve Product Range
High Performance - RTFE Seat, 2-way and 3-way valves

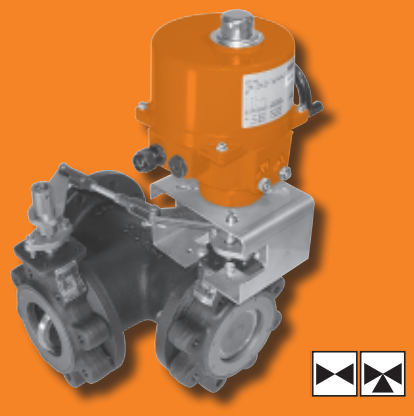

		2-way Valves			Suitable Actuators					
		Valve Nominal Size	Type		Spring Return		Non-Spring Return			
C_V 90°	C_V 60°	Inches	ANSI 150 2-way	ANSI 300 2-way	150	300	150	300	150	300
102	56	2”	F650-150SHP	F650-300SHP	AF Series	AF Series	GM Series	GM Series	SY Series	SY Series
146	80	2½”	F665-150SHP	F665-300SHP						
228	125	3”	F680-150SHP	F680-300SHP						
451	248	4”	F6100-150SHP	F6100-300SHP						
714	392	5”	F6125-150SHP	F6125-300SHP						
1103	607	6”	F6150-150SHP	F6150-300SHP						
2064	1135	8”	F6200-150SHP	F6200-300SHP						
3517	1934	10”	F6250-150SHP	F6250-300SHP						
4837	2660	12”	F6300-150SHP	F6300-300SHP						
6857	3592	14”	F6350-150SHP	F6350-300SHP						
9287	4865	16”	F6400-150SHP	F6400-300SHP						
11400	6270	18”	F6450-150SHP	F6450-300SHP						
14420	7590	20”	F6500-150SHP	F6500-300SHP						
22050	11550	24”	F6600-150SHP	F6600-300SHP						
34388	18012	30”	F6750-150SHP	n/a						

Note: C_V values listed for ANSI Class 150 Butterfly Valves. Please consult the technical documentation for ANSI Class 300 C_V values and configurations.

		3-way Valves			Suitable Actuators					
		Valve Nominal Size	Type		Spring Return		Non-Spring Return			
C_V 90°	C_V 60°	Inches	ANSI 150 3-way	ANSI 300 3-way	150	300	150	300	150	300
102	56	2”	F750-150SHP	F750-300SHP	AF Series		GM Series	GM Series	SY Series	SY Series
146	80	2½”	F765-150SHP	F765-300SHP						
228	125	3”	F780-150SHP	F780-300SHP						
451	248	4”	F7100-150SHP	F7100-300SHP						
714	392	5”	F7125-150SHP	F7125-300SHP						
1103	607	6”	F7150-150SHP	F7150-300SHP						
2064	1135	8”	F7200-150SHP	F7200-300SHP						
3517	1934	10”	F7250-150SHP	F6250-300SHP						
4837	2660	12”	F7300-150SHP	F7300-300SHP						
6857	3592	14”	F7350-150SHP	F7350-300SHP						
9287	4865	16”	F7400-150SHP	F7400-300SHP						
11500	3270	18”	F7450-150SHP	F7450-300SHP						
14420	7590	20”	F7500-150SHP	F7500-300SHP						
22050	11550	24”	F7600-150SHP	F7600-300SHP						

Note: C_V values listed for ANSI Class 150 Butterfly Valves. Please consult the technical documentation for ANSI Class 300 C_V values and configurations.

Applications
These valves are designed to meet the needs of commercial and industrial HVAC applications requiring positive shutoff for liquids at higher pressure and temperatures. Applications include chiller isolation, cooling tower isolation, change-over systems, large air handler coil control and bypass including related process control.

Mode of Operation
Butterfly valves allow higher flows with relatively low pressure loss from the valves, and are typically used for isolation or flow control for valve openings between 30 to 70 degrees of full open. At valve openings greater than 70 degrees, the pressure loss of a butterfly valve is too low to produce any significant effect on flow or the energy loss of a flow system. Butterfly valves can be controlled with a maintenance-free electronic actuator or manually with an ergonomic, wear-free plastic handle or gear operator.

Product Features
Unique body seat and disc design ensuring positive valve sealing to help assure leak free performance in water applications while maintaining low seating torque.

Actuator Specifications

Control type	On/Off, Floating Point, Proportional, 2-10 VDC Multi-Function Technology (MFT)
Manual override	all models
Electrical connection	3 ft [1m] cable with ½” conduit fitting, 2 (½”) conduits (SY)

Valve Specifications

Service	chilled or hot water, 60% glycol, steam to 50 psi
Flow characteristic	modified equal percentage, unidirectional
Action	quarter turn, mechanically limited
Sizes	2” to 30”
Type of end fitting	ANSI Class 150/300 flanged
Materials	
Body	carbon steel full lug
Disc	316 stainless steel
Seat	RPTFE
Body pressure	ASME/ANSI Class 150/300
Shaft	17-4 PH stainless
Media temp range	-20°F to 400°F (-30°C to 204°C)
Close-off pressurel	ANSI Class 150 to 285 psi @ 100°F ANSI Class 300 to 725 psi @ 100°F
Leakage	bubble tight shut-off

K20945 - 04/09 - Subject to change. © Belimo Aircontrols (USA), Inc.

D163

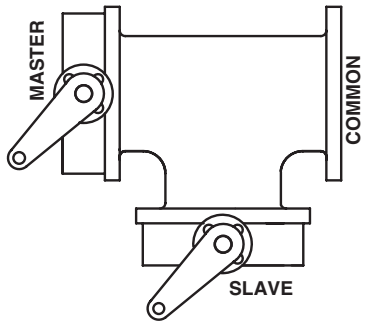

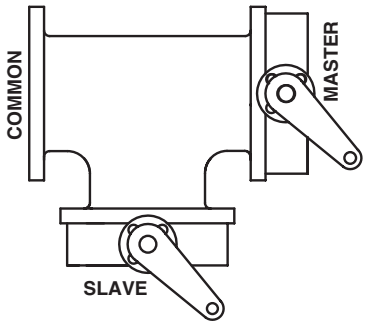

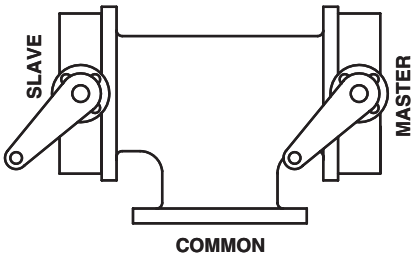

CONFIG CODE	ON/OFF OR MOD@2VDC MASTER VALVE IS	MASTER VALVE @ FAIL
X10	OPEN	NON-FAIL
X11	OPEN	OPEN
X12	OPEN	CLOSED
X13	CLOSED	NON-FAIL
X14	CLOSED	OPEN
X15	CLOSED	CLOSED

CONFIG CODE	ON/OFF OR MOD@2VDC MASTER VALVE IS	MASTER VALVE @ FAIL
X20	OPEN	NON-FAIL
X21	OPEN	OPEN
X22	OPEN	CLOSED
X23	CLOSED	NON-FAIL
X24	CLOSED	OPEN
X25	CLOSED	CLOSED

CONFIG CODE	ON/OFF OR MOD@2VDC MASTER VALVE IS	MASTER VALVE @ FAIL
X30	OPEN	NON-FAIL
X31	OPEN	OPEN
X32	OPEN	CLOSED
X33	CLOSED	NON-FAIL
X34	CLOSED	OPEN
X35	CLOSED	CLOSED

X Specifies Bi-Directional Flow Capability

Notes:
1. Slave Valve operates inversely of the Master Valve.
2. The Master Valve is always located on the run.
3. The Slave Valve may also have an actuator if required (Direct Coupled).
4. On/Off actuator normal position is a function of field logic.
5. Proportional actuator normal position is a function of the CCW/CW switch.
6. All 3-way assemblies are designed for 90 degree actuator rotation.

Flow in Std Weight Pipe (Fluid Velocity in GPM). Use with Resilient Seat BF Valves.

SIZE	2 FPS	4 FPS	6 FPS	8 FPS	10 FPS	12 FPS	14 FPS ✕	16 FPS ✕
2”	19	39	59	78	98	117	137	157
2½”	30	61	92	122	153	184	214	245
3”	44	88	132	176	220	264	308	353
4”	78	157	235	313	392	470	548	627
5”	122	245	367	490	612	734	857	979
6”	176	352	529	705	881	1058	1234	1410
8”	313	627	940	1253	1567	1880	2193	2507
10”	490	979	1469	1958	2448	2738	3427	3917
12”	705	1410	2115	2820	3525	4230	4935	5640
14”	959	1919	2879	3838	4798	5758	6717	7677
16”	1253	2507	3760	5013	6267	7520	8774	10027
18”	1586	3173	4759	6345	7931	9518	11104	12690
20”	1958	3917	5875	7834	9792	11750	13709	15668
24”	2820	5640	8460	11280	14100	16921	19741	22561
30”	4406	8813	13220	17625	22032	26438	30845	35251

It is not recommended to exceed 12 feet per second through resilient seat butterfly valves.
Velocities greater than 12 fps may damage the valve liner and disc.

K20945 - 04/09 - Subject to change. © Belimo Aircontrols (USA), Inc.

Butterfly Valve Selection-Velocity Chart

150 SHP/300 SHP Series Valves

SHP Series Valves are Flow Direction Specific.

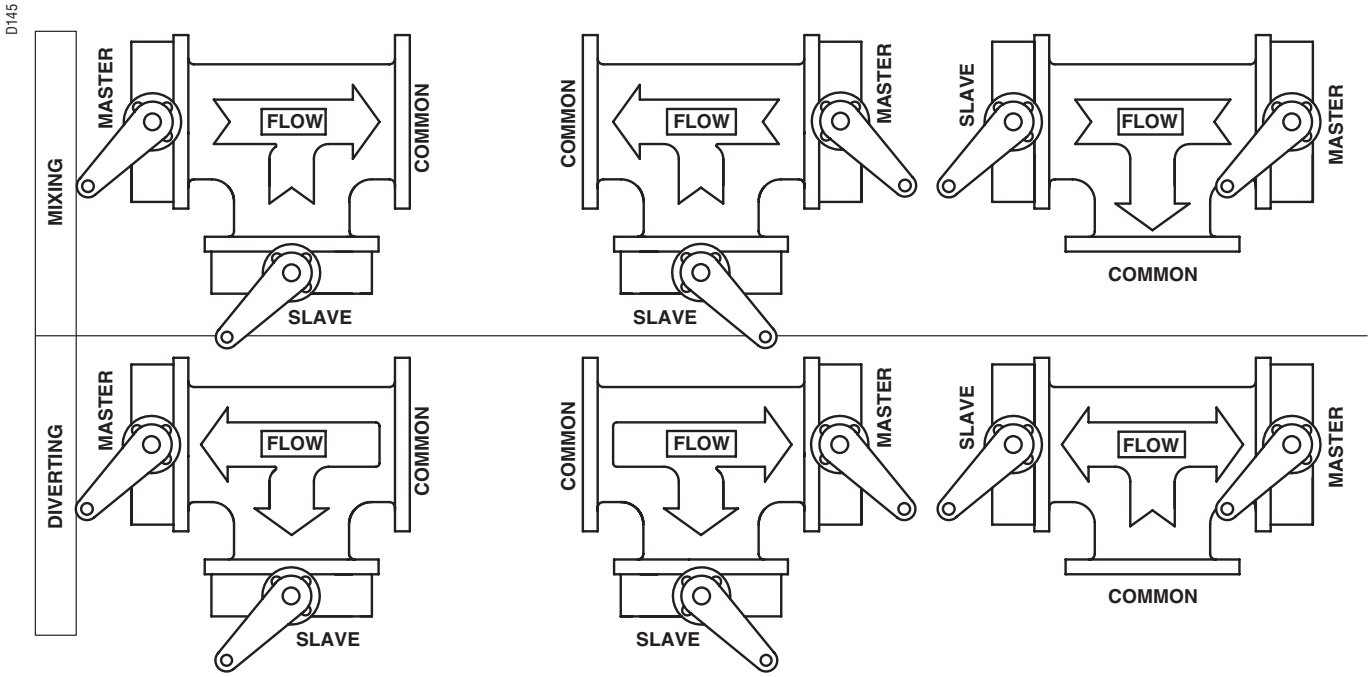

CONFIG CODE	ON/OFF OR MOD@2VDC MASTER VALVE IS	MASTER VALVE @ FAIL
M(D)10	OPEN	NON-FAIL
M(D)11	OPEN	OPEN
M(D)12	OPEN	CLOSED
M(D)13	CLOSED	NON-FAIL
M(D)14	CLOSED	OPEN
M(D)15	CLOSED	CLOSED

CONFIG CODE	ON/OFF OR MOD@2VDC MASTER VALVE IS	MASTER VALVE @ FAIL
M(D)20	OPEN	NON-FAIL
M(D)21	OPEN	OPEN
M(D)22	OPEN	CLOSED
M(D)23	CLOSED	NON-FAIL
M(D)24	CLOSED	OPEN
M(D)25	CLOSED	CLOSED

CONFIG CODE	ON/OFF OR MOD@2VDC MASTER VALVE IS	MASTER VALVE @ FAIL
M(D)30	OPEN	NON-FAIL
M(D)31	OPEN	OPEN
M(D)32	OPEN	CLOSED
M(D)33	CLOSED	NON-FAIL
M(D)34	CLOSED	OPEN
M(D)35	CLOSED	CLOSED

M Specifies MIXING, D Specifies DIVERTING

Notes:
1. Slave Valve operates inversely of the Master Valve.
2. The Master Valve is always located on the run.
3. The Slave Valve may also have an actuator if required (Direct Coupled).
4. On/Off actuator normal position is a function of field logic.
5. Proportional actuator normal position is a function of the CCW/CW switch.
6. All 3-way assemblies are designed for 90 degree actuator rotation.

Flow in Std Weight Pipe (Fluid Velocity in GPM). Use with SHP Series BF Valves.

SIZE	4 FPS	8 FPS	12 FPS	16 FPS	20 FPS	24 FPS	28 FPS	32 FPS	36 FPS ✕
2”	39	78	118	157	196	235	274	313	353
2½”	61	122	184	245	306	367	428	490	551
3”	88	176	264	353	441	529	617	705	793
4”	157	313	470	627	783	940	1097	1253	1410
5”	245	490	734	979	1224	1469	1714	1958	2203
6”	352	705	1058	1410	1763	2115	2468	2820	3173
8”	627	1253	1880	2507	3133	3760	4387	5013	5640
10”	979	1958	2938	3917	4896	5875	6854	7834	8813
12”	1410	2820	4230	5640	7050	8460	9870	11280	12690
14”	1919	3838	5738	7677	9596	11515	13435	15354	17273
16”	2507	5013	7520	10027	12534	15040	17547	20054	22561
18”	3173	6345	9518	12690	15863	19036	22208	25381	28553
20”	3917	7834	11750	15667	19584	23501	27418	31334	35251
24”	5640	11280	16921	22561	28201	33841	39481	45121	50762
30”	8813	17625	26438	35251	44064	52877	61689	70502	79315

It is not recommended to exceed 32 feet per second through high performance butterfly valves. Velocities greater than 32 fps may damage the valve.

K20945 - 04/09 - Subject to change. © Belimo Aircontrols (USA), Inc.

2 YEAR WARRANTY

SY Series Actuators

SERIES	MODEL	Run Time(s) 90°@60Hz	Power Supply	Duty Cycle	CONTROL Proportional	CONTROL 3 Point	CONTROL On/Off	Feedback	List Price
SY1	SY1-110	12 seconds	120 VAC ±10%, 50/60 Hz	30%		•	•	none, opt 1k	$796.00
	SY1-24	12 seconds	24 VAC ±10%, 50/60 Hz	30%		•	•	none, opt 1k	$796.00
	SY1-220	12 seconds	230 VAC ±10%, 50/60 Hz	30%		•	•	none, opt 1k	$796.00
	SY1-110P	12 seconds	120 VAC ±10%, 50/60 Hz	75%	•			2-10 VDC/4-20 mA	$2,878.00
	SY1-24P	12 seconds	24 VAC ±10%, 50/60 Hz	75%	•			2-10 VDC/4-20 mA	$2,878.00
	SY1-220P	12 seconds	230 VAC ±10%, 50/60 Hz	75%	•			2-10 VDC/4-20 mA	$2,878.00
SY2	SY2-110	15 seconds	120 VAC ±10%, 50/60 Hz	30%		•	•	none, opt 1k	$2,008.00
	SY2-24	15 seconds	24 VAC ±10%, 50/60 Hz	30%		•	•	none, opt 1k	$2,008.00
	SY2-220	15 seconds	230 VAC ±10%, 50/60 Hz	30%		•	•	none, opt 1k	$2,038.00
	SY2-120MFT	15 seconds	120 VAC ±10%, 50/60 Hz	75%	•			2-10 VDC/4-20 mA	$4,092.00
	SY2-24MFT	15 seconds	24 VAC ±10%, 50/60 Hz	75%	•			2-10 VDC/4-20 mA	$4,092.00
	SY2-230MFT	15 seconds	230 VAC ±10%, 50/60 Hz	75%	•			2-10 VDC/4-20 mA	$4,092.00
SY3	SY3-110	22 seconds	120 VAC ±10%, 50/60 Hz	30%		•	•	none, opt 1k	$2,288.00
	SY3-24	22 seconds	24 VAC ±10%, 50/60 Hz	30%		•	•	none, opt 1k	$2,288.00
	SY3-220	22 seconds	230 VAC ±10%, 50/60 Hz	30%		•	•	none, opt 1k	$2,288.00
	SY3-24MFT	22 seconds	120 VAC ±10%, 50/60 Hz	75%	•			2-10 VDC/4-20 mA	$4,382.00
	SY3-120MFT	22 seconds	120 VAC ±10%, 50/60 Hz	75%	•			2-10 VDC/4-20 mA	$4,382.00
	SY3-230MFT	22 seconds	230 VAC ±10%, 50/60 Hz	75%	•			2-10 VDC/4-20 mA	$4,382.00
SY4	SY4-110	16 seconds	120 VAC ±10%, 50/60 Hz	30%		•	•	none, opt 1k	$2,892.00
	SY4-24	16 seconds	24 VAC ±10%, 50/60 Hz	30%		•	•	none, opt 1k	$2,892.00
	SY4-220	16 seconds	230 VAC ±10%, 50/60 Hz	30%		•	•	none, opt 1k	$2,892.00
	SY4-24MFT	16 seconds	120 VAC ±10%, 50/60 Hz	75%	•			2-10 VDC/4-20 mA	$5,312.00
	SY4-120MFT	16 seconds	120 VAC ±10%, 50/60 Hz	75%	•			2-10 VDC/4-20 mA	$5,312.00
	SY4-230MFT	16 seconds	230 VAC ±10%, 50/60 Hz	75%	•			2-10 VDC/4-20 mA	$5,312.00
SY5	SY5-110	22 seconds	120 VAC ±10%, 50/60 Hz	30%		•	•	none, opt 1k	$3,314.00
	SY5-24	22 seconds	24 VAC ±10%, 50/60 Hz	30%		•	•	none, opt 1k	$3,314.00
	SY5-220	22 seconds	230 VAC ±10%, 50/60 Hz	30%		•	•	none, opt 1k	$3,314.00
	SY5-24MFT	22 seconds	120 VAC ±10%, 50/60 Hz	75%	•			2-10 VDC/4-20 mA	$5,732.00
	SY5-120MFT	22 seconds	120 VAC ±10%, 50/60 Hz	75%	•			2-10 VDC/4-20 mA	$5,732.00
	SY5-230MFT	22 seconds	230 VAC ±10%, 50/60 Hz	75%	•			2-10 VDC/4-20 mA	$5,732.00
SY6	SY6-110	28 seconds	120 VAC ±10%, 50/60 Hz	30%		•	•	none, opt 1k	$3,950.00
	SY6-220	28 seconds	230 VAC ±10%, 50/60 Hz	30%		•	•	none, opt 1k	$3,950.00
	SY6-120MFT	28 seconds	120 VAC ±10%, 50/60 Hz	75%	•			2-10 VDC/4-20 mA	$6,368.00
	SY6-230MFT	28 seconds	230 VAC ±10%, 50/60 Hz	75%	•			2-10 VDC/4-20 mA	$6,368.00
SY7	SY7-110	46 seconds	120 VAC ±10%, 50/60 Hz	30%		•	•	none, opt 1k	$4,728.00
	SY7-220	46 seconds	230 VAC ±10%, 50/60 Hz	30%		•	•	none, opt 1k	$4,728.00
	SY7-120MFT	46 seconds	120 VAC ±10%, 50/60 Hz	75%	•			2-10 VDC/4-20 mA	$7,082.00
	SY7-230MFT	46 seconds	230 VAC ±10%, 50/60 Hz	75%	•			2-10 VDC/4-20 mA	$7,082.00
SY8	SY8-110	46 seconds	120 VAC ±10%, 50/60 Hz	30%		•	•	none, opt 1k	$6,340.00
	SY8-220	46 seconds	230 VAC ±10%, 50/60 Hz	30%		•	•	none, opt 1k	$6,340.00
	SY8-120MFT	46 seconds	120 VAC ±10%, 50/60 Hz	75%	•			2-10 VDC/4-20 mA	$8,670.00
	SY8-230MFT	46 seconds	230 VAC ±10%, 50/60 Hz	75%	•			2-10 VDC/4-20 mA	$8,670.00

Proportional actuators will accept 0-10 VDC, 2-10 VDC, or 4-20 mA control signals as standard.
All SY actuators are non-spring return, but can be used with NSV-SY back up systems for fail-safe applications.
These products carry a two year warranty when sold as part of an assembly or with a UFLK retrofit kit.

K20945 - 04/09 - Subject to change. © Belimo Aircontrols (USA), Inc.

BELIMO

2 YEAR WARRANTY

SY Series Actuators

SERIES	MODEL	Run Time(s) 90°@60Hz	Power Supply	Duty Cycle	CONTROL Proportional	CONTROL 3 Point	CONTROL On/Off	Feedback	List Price
SY9	SY9-110	58 seconds	120 VAC ±10%, 50/60 Hz	30%		•	•	none, opt 1k	$7,846.00
	SY9-220	58 seconds	230 VAC ±10%, 50/60 Hz	30%		•	•	none, opt 1k	$7,846.00
	SY9-120MFT	58 seconds	120 VAC ±10%, 50/60 Hz	75%	•			2-10 VDC/4-20 mA	$10,196.00
	SY9-230MFT	58 seconds	230 VAC ±10%, 50/60 Hz	75%	•			2-10 VDC/4-20 mA	$10,196.00
SY10	SY10-110	58 seconds	120 VAC ±10%, 50/60 Hz	30%		•	•	none, opt 1k	$8,226.00
	SY10-220	58 seconds	230 VAC ±10%, 50/60 Hz	30%		•	•	none, opt 1k	$8,226.00
	SY10-120MFT	58 seconds	120 VAC ±10%, 50/60 Hz	75%	•			2-10 VDC/4-20 mA	$10,576.00
	SY10-230MFT	58 seconds	230 VAC ±10%, 50/60 Hz	75%	•			2-10 VDC/4-20 mA	$10,576.00
SY11	SY11-110	58 seconds	120 VAC ±10%, 50/60 Hz	30%		•	•	none, opt 1k	$10,902.00
	SY11-220	58 seconds	230 VAC ±10%, 50/60 Hz	30%		•	•	none, opt 1k	$10,902.00
	SY11-120MFT	58 seconds	120 VAC ±10%, 50/60 Hz	75%	•			2-10 VDC/4-20 mA	$13,256.00
	SY11-230MFT	58 seconds	230 VAC ±10%, 50/60 Hz	75%	•			2-10 VDC/4-20 mA	$13,256.00
SY12	SY12-110	58 seconds	120 VAC ±10%, 50/60 Hz	30%		•	•	none, opt 1k	$11,670.00
	SY12-220	58 seconds	230 VAC ±10%, 50/60 Hz	30%		•	•	none, opt 1k	$11,670.00
	SY12-120MFT	58 seconds	120 VAC ±10%, 50/60 Hz	75%	•			2-10 VDC/4-20 mA	$13,870.00
	SY12-230MFT	58 seconds	230 VAC ±10%, 50/60 Hz	75%	•			2-10 VDC/4-20 mA	$13,870.00

Proportional actuators will accept 0-10 VDC, 2-10 VDC, or 4-20 mA control signals as standard.
All SY actuators are non-spring return, but can be used with NSV-SY back up systems for fail-safe applications.
These products carry a two year warranty when sold as part of an assembly or with a UFLK retrofit kit.

SY MULTI-FUNCTION TECHNOLOGY

Description	P-CODE	Control Input	Built-in Feedback	Loss of Signal	Running Time	List Price
MFT	ACE	2…10V	2...10V	stop	actuator(s) constant	No Charge
MFT	ACF	0.5…10V	0.5...10V	stop	actuator(s) constant	No Charge
MFT	ACG	4…20mA	4…20mA	stop	actuator(s) constant	No Charge
MFT	ACH	4…20mA	2...10V	stop	actuator(s) constant	No Charge
MFT	ACJ	2…10V	2...10V	open	actuator(s) constant	No Charge
MFT	ACK	0.5…10V	0.5...10V	open	actuator(s) constant	No Charge
MFT	ACL	4…20mA	4…20mA	open	actuator(s) constant	No Charge
MFT	ACM	4…20mA	2...10V	open	actuator(s) constant	No Charge
MFT	ACN	2…10V	2...10V	close	actuator(s) constant	No Charge
MFT	ACP	0.5…10V	0.5...10V	close	actuator(s) constant	No Charge
MFT	ACR	4…20mA	4…20mA	close	actuator(s) constant	No Charge
MFT	ACS	4…20mA	2...10V	close	actuator(s) constant	No Charge

Most popular configurations are available at no additional cost. All other configurations carry a $34.00 list price.
Standard delivery may vary, please consult your customer service representative for the latest lead time(s).

K20945 - 04/09 - Subject to change. © Belimo Aircontrols (USA), Inc.

Valve Specifications

Service	chilled, hot water, 60% glycol		
Flow characteristic	modified equal percentage (F6…HSU) modified linear (F7…HSU)		
Action	90° rotation		
Sizes	2”, 2½”, 3”, 4”, 5”, 6”		
Type of end fitting	125/150 lb. flanged, ASME B16.1		
Materials:			
Body	cast iron, ASTM A126	O-ring	EPDM
Disc	304 stainless steel	Upper bushing	RPTFE
Seat	EPDM	Middle bushings	RPTFE
Body pressure	200 psi at -30°F to +275°F	Lower bushing	RPTFE
Shaft	416 stainless steel		
Flange	for use with ANSI Class 125/150 Flanges		
Media temperature range	-22°F to +250°F [-30°C to +120°C]		
Operating ambient temperature range	-22°F to +122°F [-30°C to +50°C]		
Close-off pressure	50 psi		
Rangeability	10:1 (for 30° to 70° range)		
Maximum velocity	12 FPS		
Body pressure rating	PN16		

GM…

2*GM…

2 YEAR WARRANTY

F6HSU 2-way Butterfly Valve with Non-Spring Return Actuator

ACTUATOR PART #						AMB24-3X1	AMX24-MFTX1	GMB24-3X1	GMX24-MFTX1	2*GMB24-3X1	2*GMX24-MFTX1
Control type						On/Off, Floating Pt.	Proportional/MFT	On/Off, Floating Pt.	Proportional/MFT	On/Off, Floating Pt.	Proportional/MFT
Manual override						•	•	•	•	•	•
Running time						95 seconds	150 seconds	150 seconds	150 seconds	150 seconds	150 seconds
Noise level						<45 dB(A)	<45 dB(A)	<45 dB(A)	<45 dB(A)	<45 dB(A)	<45 dB(A)
ELECTRICAL CONNECTION:											
3 ft cable, ½” conduit fitting						•	•	•	•	•	•
Butterfly Valve Model #	**C_V 90°**	**C_V 60°**	**Valve Nominal Size Inches**	**DN/mm**	**Close-off psi**						
F650HSU	115	44	2”	50	50	$586.00	$720.00				
F665HSU	196	75	2½”	65	50	$618.00	$750.00				
F680HSU	302	116	3”	80	50	$630.00	$764.00				
F6100HSU	600	230	4”	100	50			$820.00	$896.00		
F6125HSU	1022	392	5”	125	50			$912.00	$992.00		
F6150HSU	1579	605	6”	150	50					$1,458.00	$1,618.00

F7HSU 3-way Butterfly Valve with Non-Spring Return Actuator

ACTUATOR PART #						AMB24-3X1	AMX24-MFTX1	GMB24-3X1	GMX24-MFTX1	2*GMB24-3X1	2*GMX24-MFTX1
Control type						On/Off, Floating Pt.	Proportional/MFT	On/Off, Floating Pt.	Proportional/MFT	On/Off, Floating Pt.	Proportional/MFT
Manual override						•	•	•	•	•	•
Running time						95 seconds	150 seconds	150 seconds	150 seconds	150 seconds	150 seconds
Noise level						<45 dB(A)	<45 dB(A)	<45 dB(A)	<45 dB(A)	<45 dB(A)	<45 dB(A)
ELECTRICAL CONNECTION:											
3 ft cable, ½” conduit fitting						•	•	•	•	•	•
Butterfly Valve Model #	**C_V 90°**	**C_V 60°**	**Valve Nominal Size Inches**	**DN/mm**	**Close-off psi**						
F750HSU	115	44	2”	50	50	$1,182.00	$1,334.00				
F765HSU	196	75	2½”	65	50	$1,326.00	$1,530.00				
F780HSU	302	116	3”	80	50			$1,474.00	$1,656.00		
F7100HSU	600	230	4”	100	50					$2,262.00	$2,454.00
F7125HSU	1022	392	5”	125	50					$2,516.00	$2,680.00
F7150HSU	1579	605	6”	150	50					$2,602.00	$2,828.00

† Specify when ordering Proportional (P-10001) 2-10 VDC, Floating Pt. (P-30001), On/Off (P-40002) for AM & GM actuators.

MULTI-FUNCTION TECHNOLOGY

Description	P-CODE	Control Input	Running Time	Built-in Feedback	List Price
P-10001	A01	2-10 VDC	150 seconds	2-10 VDC	No Charge
P-10002	A02	0-10 VDC	150 seconds	0-10 VDC	No Charge
P-10028	A28	0-10 VDC	100 seconds	0-10 VDC	No Charge
P-10063	A63	0.5-4.5 VDC	150 seconds	0.5-4.5 VDC	No Charge
P-10064	A64	5.5-10 VDC	150 seconds	5.5-10 VDC	No Charge
P-20002	W02	0.02-5.00 seconds PWM	150 seconds	2-10 VDC	No Charge
P-20003	W03	0.10-25.5 seconds PWM	150 seconds	2-10 VDC	No Charge
P-30001	F01	Floating Point	150 seconds	2-10 VDC	No Charge
P-40002	J02	On/Off	150 seconds	2-10 VDC	No Charge

Most popular configurations are available at no additional cost. All other configurations carry a $34.00 list price.

K20945 - 04/09 - Subject to change. © Belimo Aircontrols (USA), Inc.

F6/F7 HSU Series Butterfly Valves, Spring Return Actuator

Undercut Disc, 50 Psi Close-Off

BELIMO

Valve Specifications

Service	chilled, hot water, 60% glycol		
Flow characteristic	modified equal percentage (F6…HSU) modified linear (F7…HSU)		
Action	90° rotation		
Sizes	2", 2½", 3", 4", 5"		
Type of end fitting	125/150 lb. flanged, ASME B16.1		
Materials:			
Body	cast iron, ASTM A126	O-ring	EPDM
Disc	304 stainless steel	Upper bushing	RPTFE
Seats	EPDM	Middle bushings	RPTFE
Body pressure	200 psi at -30°F to +275°F	Lower bushing	RPTFE
Shaft	416 stainless steel		
Body rating	for use with ANSI Class 125/150 Flanges		
Media temperature range	-22°F to +250°F [-30°C to +120°C]		
Operating ambient temperature range	-22°F to +122°F [-30°C to +50°C]		
Close-off pressure	50 psi		
Rangeability	10:1 (for 30° to 70° range)		
Maximum velocity	12 FPS		
Body pressure rating	PN16		

AF…

2*AF…

2 YEAR WARRANTY

F6HSU 2-way Butterfly Valve with Spring Return Actuator

ACTUATOR PART #						AF24 US	AF24-MFT US	2*AF24 US	2*AF24-MFT US
Control type						On/Off, Floating Pt.	Proportional/MFT †	On/Off, Floating Pt.	Proportional/MFT †
Manual override						•	•	•	•
Running time					motor	150 seconds	150 seconds	150 seconds	150 seconds
					spring	<20 seconds	<20 seconds	<20 seconds	<20 seconds
Noise level						<45 dB(A)	<45 dB(A)	<45 dB(A)	<45 dB(A)
ELECTRICAL CONNECTION:									
3 ft cable, ½" conduit fitting						•	•	•	•
Butterfly Valve Model #	**Cv 90°**	**Cv 60°**	**Valve Nominal Size Inches**	**DN/mm**	**Close-off psi**				
F650HSU	115	44	2 "	50	50	$750.00	$882.00		
F665HSU	196	75	2½"	65	50	$780.00	$902.00		
F680HSU	302	116	3"	80	50			$1,004.00	$1,546.00
F6100HSU	600	230	4"	100	50			$1,332.00	$1,618.00
F6125HSU	1022	392	5"	125	50			$1,406.00	$1,688.00

F7HSU 3-way Butterfly Valve with Spring Return Actuator

ACTUATOR PART #						AF24 US	AF24-MFT US	2*AF24 US	2*AF24-MFT US
Butterfly Valve Model #	**Cv 90°**	**Cv 60°**	**Valve Nominal Size Inches**	**DN/mm**	**Close-off psi**				
F750HSU	115	44	2"	50	50	$1,398.00	$1,650.00		
F765HSU	196	75	2½"	65	50			$2,056.00	$2,464.00
F780HSU	302	116	3"	80	50			$2,108.00	$2,540.00

† Specify when ordering Proportional (P-10001) 2-10 VDC, Floating Pt. (P-30001), On/Off (P-40002) for AF actuators. Note: Specify configuration.

MULTI-FUNCTION TECHNOLOGY

Description	P-CODE	Control Input	Running Time	Built-in Feedback	List Price
P-10001	A01	2-10 VDC	150 seconds	2-10 VDC	No Charge
P-10002	A02	0-10 VDC	150 seconds	0-10 VDC	No Charge
P-10028	A28	0-10 VDC	100 seconds	0-10 VDC	No Charge
P-10063	A63	0.5-4.5 VDC	150 seconds	0.5-4.5 VDC	No Charge
P-10064	A64	5.5-10 VDC	150 seconds	5.5-10 VDC	No Charge
P-20002	W02	0.02-5 seconds PWM	150 seconds	2-10 VDC	No Charge
P-20003	W03	0.10-25.5 seconds PWM	150 seconds	2-10 VDC	No Charge
P-30001	F01	Floating Point	150 seconds	2-10 VDC	No Charge
P-40002	J02	On/Off	150 seconds	2-10 VDC	No Charge

Add the programming code pre-set MFT configuration number and list price to the actuator when ordering, as needed. Note: Most popular configurations available at no additional cost.

OPTIONS	AF24-S US	AF24-MFT-S US	AF120 US	AF120-S US	2*AF24-S US	2*AF24-MFT-S US	2*AF120 US	2*AF120-S US
120 VAC power supply			•	•			•	•
Built-in auxiliary switch	•	•		•	•	•		•
F6HSU 2-way Butterfly Valve with Spring Return								
F650HSU	$838.00	$968.00	$802.00	$890.00				
F665HSU	$866.00	$990.00	$834.00	$918.00				
F680HSU					$1,092.00	$1,632.00	$1,112.00	$1,198.00
F6100HSU					$1,418.00	$1,706.00	$1,440.00	$1,524.00
F6125HSU					$1,774.00	$1,774.00	$1,514.00	$1,602.00
F7HSU 3-way Butterfly Valve with Spring Return								
F750HSU	$1,486.00	$1,738.00	$1,452.00	$1,540.00				
F765HSU					$2,142.00	$2,550.00	$2,164.00	$2,252.00
F780HSU					$2,196.00	$2,628.00	$2,216.00	$2,304.00

K20945 - 04/09 - Subject to change. © Belimo Aircontrols (USA), Inc.

Valve Specifications

Service	chilled, hot water, 60% glycol		
Flow characteristic	modified equal percentage (F6…HS) modified linear (F7…HS)		
Action	90° rotation		
Sizes	2”, 2½”, 3”, 4”		
Type of end fitting	125/150 lb. flanged, ASME B16.1		
Materials:			
Body	cast iron, ASTM A126	O-ring	EPDM
Disc	304 stainless steel	Upper bushing	RPTFE
Seats	EPDM	Middle bushings	RPTFE
Body pressure	200 psi at -30°F to 275°F	Lower bushing	RPTFE
Shaft	416 stainless steel		
Flange	for use with ANSI Class 125/150 Flanges		
Media temperature range	-22°F to +250°F [-30°C to + 120°C]		
Operating ambient temperature range	-22°F to +122°F [-30°C to + 50°C]		
Close-off pressure	200 psi		
Rangeability	10:1 (for 30° to 70° range)		
Maximum velocity	12 FPS		
Body pressure rating	PN16		

GM…

2*GM…

2 YEAR WARRANTY

F6HS 2-way Butterfly Valve with Non-Spring Return Actuator

ACTUATOR PART #						AMB24-3X1	AMX24-MFTX1	GMB24-3X1	GMX24-MFTX1	2*GMB24-3X1	2*GMX24-MFTX1
Control type						On/Off, Floating Pt.	Proportional/MFT †	On/Off, Floating Pt.	Proportional/MFT †	On/Off, Floating Pt.	Proportional/MFT †
Manual override						•	•	•	•	•	•
Running time						95 seconds	150 seconds	150 seconds	150 seconds	150 seconds	150 seconds
Noise level						<45 dB(A)	<45 dB(A)	<45 dB(A)	<45 dB(A)	<45 dB(A)	<45 dB(A)
ELECTRICAL CONNECTION:											
3 ft cable, ½” conduit fitting						•	•	•	•	•	•
Butterfly Valve Model #	**C_V 90°**	**C_V 60°**	**Valve Nominal Size Inches**	**DN/mm**	**Close-off psi**						
F650HS	115	44	2”	50	200	$608.00	$726.00				
F665HS	196	75	2½”	65	200	$626.00	$756.00				
F680HS	302	116	3”	80	200			$864.00	$930.00		
F6100HS	600	230	4”	100	200					$1,334.00	$1,496.00

F7HS 3-way Butterfly Valve with Non-Spring Return Actuator

ACTUATOR PART #						AMB24-3X1	AMX24-MFTX1	GMB24-3X1	GMX24-MFTX1	2*GMB24-3X1	2*GMX24-MFTX1
Control type						On/Off, Floating Pt.	Proportional/MFT	On/Off, Floating Pt.	Proportional/MFT	On/Off, Floating Pt.	Proportional/MFT
Manual override						•	•	•	•	•	•
Running time						95 seconds	150 seconds	150 seconds	150 seconds	150 seconds	150 seconds
Noise level						<45 dB(A)	<45 dB(A)	<45 dB(A)	<45 dB(A)	<45 dB(A)	<45 dB(A)
ELECTRICAL CONNECTION:											
3 ft cable, ½” conduit fitting						•	•	•	•	•	•
Butterfly Valve Model #	**C_V 90°**	**C_V 60°**	**Valve Nominal Size Inches**	**DN/mm**	**Close-off psi**						
F750HS	115	44	2”	50	200	$1,214.00	$1,378.00				
F765HS	196	75	2½”	65	200			$1,464.00	$1,656.00		
F780HS	302	116	3”	80	200					$1,836.00	$2,258.00
F7100HS	600	230	4”	100	200					$2,278.00	$2,570.00

† Specify when ordering Proportional (P-10001) 2-10 VDC, Floating Pt. (P-30001), On/Off (P-40002) for MFT actuators. Note: Specify configuration.

MULTI-FUNCTION TECHNOLOGY

Description	P-CODE	Control Input	Running Time	Built-in Feedback	List Price
P-10001	A01	2-10 VDC	150 seconds	2-10 VDC	No Charge
P-10002	A02	0-10 VDC	150 seconds	0-10 VDC	No Charge
P-10028	A28	0-10 VDC	100 seconds	0-10 VDC	No Charge
P-10063	A63	0.5-4.5 VDC	150 seconds	0.5-4.5 VDC	No Charge
P-10064	A64	5.5-10 VDC	150 seconds	5.5-10 VDC	No Charge
P-20002	W02	0.02-5 seconds PWM	150 seconds	2-10 VDC	No Charge
P-20003	W03	0.10-25.5 seconds PWM	150 seconds	2-10 VDC	No Charge
P-30001	F01	Floating Point	150 seconds	2-10 VDC	No Charge
P-40002	J02	On/Off	150 seconds	2-10 VDC	No Charge

Most popular configurations are available at no additional cost.
All other configurations carry a $34.00 list price.

K20945 - 04/09 - Subject to change. © Belimo Aircontrols (USA), Inc.

F6/F7 HS Series Butterfly Valve, Spring Return Actuator

Full Rated Disc

BELIMO

Valve Specifications

Service	chilled, hot water, 60% glycol		
Flow characteristic	modified equal percentage (F6…HS) modified linear (F7…HS)		
Action	90° rotation		
Sizes	2", 2½", 3"		
Type of end fitting	125/150 lb. flanged, ASME B16.1		
Materials:			
Body	cast iron, ASTM A126	O-ring	EPDM
Disc	304 stainless steel	Upper bushing	RPTFE
Seats	EPDM	Middle bushings	RPTFE
Body pressure	200 psi at -30°F to +275°F	Lower bushing	RPTFE
Shaft	416 stainless steel		
Body rating	for use with ANSI Class 125 Flanges		
Media temperature range	-22° F to +250°F [-30°C to +120°C]		
Operating ambient temperature range	-22° F to +122° F [-30°C to +50°C]		
Close-off pressure	200 psi		
Rangeability	10:1 (for 30° to 70° range)		
Maximum velocity	12 FPS		
Body pressure rating	PN16		

AF…

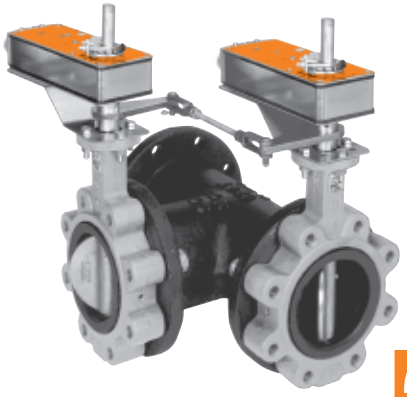

2*AF…

2 YEAR WARRANTY

F6HS 2-way Butterfly Valve with Spring Return Actuator

ACTUATOR PART #						AF24 US	AF24-MFT US	2*AF24 US	2*AF24-MFT US
Control type						On/Off, Floating Pt.	Proportional/MFT †	On/Off, Floating Pt.	Proportional/MFT †
Manual override						•	•	•	•
Running time					motor	150 seconds	150 seconds	150 seconds	150 seconds
					spring	<20 seconds	<20 seconds	<20 seconds	<20 seconds
Noise level						<45 dB(A)	<45 dB(A)	<45 dB(A)	<45 dB(A)
ELECTRICAL CONNECTION:									
3 ft cable, ½" conduit fitting						•	•	•	•
Butterfly Valve Model #	**C_V 90°**	**C_V 60°**	**Valve Nominal Size Inches**	**DN/mm**	**Close-off psi**				
F650HS	115	44	2"	50	200	$810.00	$994.00		
F665HS	196	75	2½"	65	200			$990.00	$1,212.00
F680HS	302	116	3"	80	200			$1,272.00	$1,654.00

F7HS 3-way Butterfly Valve with Spring Return Actuator

ACTUATOR PART #						AF24 US	AF24-MFT US	2*AF24 US	2*AF24-MFT US
Butterfly Valve Model #	**C_V 90°**	**C_V 60°**	**Valve Nominal Size Inches**	**DN/mm**	**Close-off psi**				
F750HS	115	44	2"	50	200	$1,424.00	$1,664.00		
F765HS	196	75	2½"	65	200			$2,086.00	$2,540.00

† Specify when ordering Proportional (P-10001) 2-10 VDC, Floating Pt. (P-30001), On/Off (P-40002) for AF actuators. Note: Specify configuration.

MULTI-FUNCTION TECHNOLOGY

Description	P-CODE	Control Input	Running Time	Built-in Feedback	List Price
P-10001	A01	2-10 VDC	150 seconds	2-10 VDC	No Charge
P-10002	A02	0-10 VDC	150 seconds	0-10 VDC	No Charge
P-10028	A28	0-10 VDC	100 seconds	0-10 VDC	No Charge
P-10063	A63	0.5-4.5 VDC	150 seconds	0.5-4.5 VDC	No Charge
P-10064	A64	5.5-10 VDC	150 seconds	5.5-10 VDC	No Charge
P-20002	W02	0.02-5.00 seconds PWM	150 seconds	2-10 VDC	No Charge
P-20003	W03	0.10-25.5 seconds PWM	150 seconds	2-10 VDC	No Charge
P-30001	F01	Floating Point	150 seconds	2-10 VDC	No Charge
P-40002	J02	On/Off	150 seconds	2-10 VDC	No Charge

Add the programming code pre-set MFT configuration number and list price to the actuator when ordering, as needed. Note: Most popular configurations available at no additional cost.

OPTIONS	AF24-S US	AF24-MFT-S US	AF120 US	AF120-S US	2*AF24-S US	2*AF24-MFT-S US	2*AF120 US	2*AF120-S US
120 VAC power supply			•	•			•	•
Built-in auxiliary switch	•	•		•	•	•		•
F6HS 2-way Butterfly Valve with Spring Return								
F650HS	$898.00	$1,080.00	$866.00	$954.00				
F665HS					$1,076.00	$1,298.00	$1,098.00	$1,184.00
F680HS					$1,360.00	$1,742.00	$1,380.00	$1,466.00
F7HS 3-way Butterfly Valve with Spring Return								
F750HS	$1,510.00	$1,752.00	$1,480.00	$1,566.00				
F765HS					$2,172.00	$2,628.00	$2,194.00	$2,278.00

K20945 - 04/09 - Subject to change. © Belimo Aircontrols (USA), Inc.

F6/F7 HSU Series Butterfly Valve, Non-Spring Return Actuator

with NEMA 4X Industrial Style Actuator - Undercut Disc

Valve Specifications

Service	chilled, hot water, 60% glycol		
Flow characteristic	modified equal percentage (F6…HSU) modified linear (F7…HSU)		
Action	90° rotation		
Sizes	2”, 2½”, 3”, 4”, 5”, 6”, 8”, 10”, 12”		
Type of end fitting	125/150 lb. flanged, ASME B16.1		
Materials:			
Body	cast iron, ASTM A126	O-ring	EPDM
Disc	304 stainless steel	Upper bushing	RPTFE
Seats	EPDM	Middle bushings	RPTFE
Body pressure	200 psi at -30° F to +275° F	Lower bushing	RPTFE
Shaft	416 stainless steel		
Flange	for use with ANSI Class 125/150 Flanges		
Media temperature range	-22°F to +250°F [-30°C to +120°C]		
Operating ambient temperature range	-22°F to +150°F [-30°C to +65°C]		
Close-off pressure	50 psi		
Rangeability	10:1 (for 30° to 70° range)		
Maximum velocity	12 FPS		
Body pressure rating	PN16		

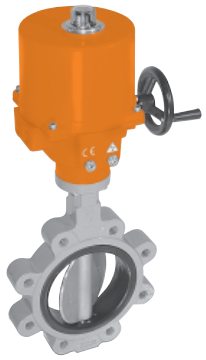

F6 SY…

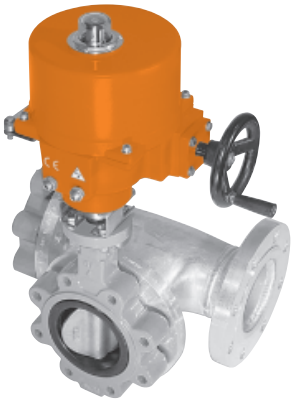

F7 SY…

2 YEAR WARRANTY

F6HSU 2-way Butterfly Valve with NEMA 4 Industrial Style Actuator

ACTUATOR PART #						SY1-24, SY1-110, SY1-220	SY1-24P, SY1-110P	SY2-24, SY2-110, SY2-220	SY2-24MFT, SY2-120MFT, SY2-230MFT
Control type						On/Off, Floating Pt.	Proportional	On/Off, Floating Pt.	Proportional/MFT
Manual override						•	•	•	•
Running time						12 seconds	12 seconds	15 seconds	15 seconds
ELECTRICAL CONNECTION:									
Two (2) ½” conduit fittings						•	•	•	•
Covered terminal strip						•	•	•	•
Butterfly Valve Model #	**C_V 90°**	**C_V 60°**	**Valve Nominal Size Inches**	**DN/mm**	**Close-off psi**				
F650HSU	115	44	2”	50	50	$2,008.00	$3,176.00		
F665HSU	196	75	2½”	65	50	$2,026.00	$3,188.00		
F680HSU	302	116	3”	80	50	$2,062.00	$3,206.00		
F6100HSU	600	230	4”	100	50			$2,354.00	$3,526.00
F6125HSU	1022	392	5”	125	50			$2,448.00	$3,618.00
F6150HSU	1579	605	6”	150	50			$3,086.00	$4,130.00

Please add desired voltage to model number. Example: F6200HSU+SY3-24.

F7HSU 3-way Butterfly Valve with NEMA 4 Industrial Style Actuator

ACTUATOR PART #						SY1-24, SY1-110, SY1-220	SY1-24P, SY1-110P	SY2-24, SY2-110, SY2-220	SY2-24MFT, SY2-120MFT, SY2-230MFT
Butterfly Valve Model #	**C_V 90°**	**C_V 60°**	**Valve Nominal Size Inches**	**DN/mm**	**Close-off psi**				
F750HSU	115	44	2”	50	50	$3,318.00	$4,462.00		
F765HSU	196	75	2½”	65	50	$3,348.00	$4,536.00		
F780HSU	302	116	3”	80	50			$3,668.00	$4,708.00
F7100HSU	600	230	4”	100	50			$3,906.00	$5,178.00
F7125HSU	1022	392	5”	125	50			$4,344.00	$5,490.00
F7150HSU	1579	605	6”	150	50			$4,914.00	$6,232.00

Please add desired voltage to model number. Ex: F7300HSU+SY4-120MFT. Note: Specify configuration.

SY MULTI-FUNCTION TECHNOLOGY

Description	P-CODE	Control Input	Built-in Feedback	Loss of Signal	Running Time	List Price
MFT	ACE	2-10V	2-10V	stop	actuator(s) constant	No Charge
MFT	ACF	0.5-10V	0.5-10V	stop	actuator(s) constant	No Charge
MFT	ACG	4-20mA	4-20mA	stop	actuator(s) constant	No Charge
MFT	ACH	4-20mA	2-10V	stop	actuator(s) constant	No Charge
MFT	ACJ	2-10V	2-10V	open	actuator(s) constant	No Charge
MFT	ACK	0.5-10V	0.5-10V	open	actuator(s) constant	No Charge
MFT	ACL	4-20mA	4-20mA	open	actuator(s) constant	No Charge
MFT	ACM	4-20mA	2-10V	open	actuator(s) constant	No Charge
MFT	ACN	2-10V	2-10V	close	actuator(s) constant	No Charge
MFT	ACP	0.5-10V	0.5-10V	close	actuator(s) constant	No Charge
MFT	ACR	4-20mA	4-20mA	close	actuator(s) constant	No Charge
MFT	ACS	4-20mA	2-10V	close	actuator(s) constant	No Charge

Most popular configurations are available at no additional cost. All other configurations carry a $34.00 list price.
Standard delivery may vary, please consult your customer service representative for the latest lead time(s).

K20945 - 04/09 - Subject to change. © Belimo Aircontrols (USA), Inc.

F6/F7 HSU Series Butterfly Valve, Non-Spring Return Actuator

with NEMA 4X Industrial Style Actuator - Undercut Disc

Valve Specifications

Service	chilled, hot water, 60% glycol		
Flow characteristic	modified equal percentage (F6…HSU) modified linear (F7…HSU)		
Action	90° rotation		
Sizes	2”, 2½”, 3”, 4”, 5”, 6”, 8”, 10”, 12”		
Type of end fitting	125/150 lb. flanged, ASME B16.1		
Materials:			
Body	cast iron, ASTM A126	O-ring	EPDM
Disc	304 stainless steel	Upper bushing	RPTFE
Seats	EPDM	Middle bushings	RPTFE
Body pressure	200 psi at -30° F to 275° F	Lower bushing	RPTFE
Shaft	416 stainless steel		
Flange	for use with ANSI Class 125/150 Flanges		
Media temperature range	-22°F to +250°F [-30°C to +120°C]		
Operating ambient temperature range	-22°F to +150°F [-30°C to +65°C]		
Close-off pressure	50 psi		
Rangeability	10:1 (for 30° to 70° range)		
Maximum velocity	12 FPS		
Body pressure rating	PN16		

F6 SY…

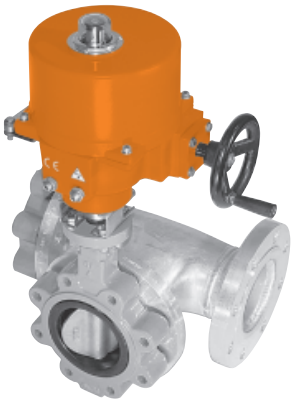

F7 SY…

2 YEAR WARRANTY

F6HSU 2-way Butterfly Valve with NEMA 4X Industrial Style Actuator

ACTUATOR PART #						SY3-24, SY3-110, SY3-220	SY3-24MFT, SY3-120MFT, SY3-230MFT	SY4-24, SY4-110, SY4-220	SY4-24MFT, SY4-120MFT, SY4-230MFT
Control type						On/Off, Floating Pt.	Proportional/MFT	On/Off, Floating Pt.	Proportional/MFT
Manual override						•	•	•	•
Running time						22 seconds	22 seconds	16 seconds	16 seconds
ELECTRICAL CONNECTION:									
Two (2) ½” conduit fittings						•	•	•	•
Covered terminal strip						•	•	•	•
Butterfly Valve Model #	**Cv 90°**	**Cv 60°**	**Valve Nominal Size Inches**	**DN/mm**	**Close-off psi**				
F6200HSU	3136	1202	8”	200	50	$3,258.00	$4,442.00		
F6250HSU	5340	2047	10”	250	50	$4,152.00	$5,966.00		
F6300HSU	8250	3062	12”	300	50			$5,952.00	$7,120.00

Please add desired voltage to model number. Example: F6200HSU+SY3-24.

F7HSU 3-way Butterfly Valve with NEMA 4X Industrial Style Actuator

ACTUATOR PART #						SY3-24, SY3-110, SY3-220	SY3-24MFT, SY3-120MFT, SY3-230MFT	SY4-24, SY4-110, SY4-220	SY4-24MFT, SY4-120MFT, SY4-230MFT
Control type						On/Off, Floating Pt.	Proportional/MFT	On/Off, Floating Pt.	Proportional/MFT
Manual override						•	•	•	•
Running time						22 seconds	22 seconds	16 seconds	16 seconds
Butterfly Valve Model #	**Cv 90°**	**Cv 60°**	**Valve Nominal Size Inches**	**DN/mm**	**Close-off psi**				
F7200HSU	3136	1202	8”	200	50	$6,202.00	$7,440.00		
F7250HSU	5340	2047	10”	250	50			$7,464.00	$9,066.00
F7300HSU	8250	3062	12”	300	50			$10,308.00	$11,694.00

Please add desired voltage to model number. Ex: F7300HSU+SY4-120MFT. Note: Specify configuration.

SY MULTI-FUNCTION TECHNOLOGY

Description	P-CODE	Control Input	Built-in Feedback	Loss of Signal	Running Time	List Price
MFT	ACE	2-10V	2-10V	stop	actuator(s) constant	No Charge
MFT	ACF	0.5-10V	0.5-10V	stop	actuator(s) constant	No Charge
MFT	ACG	4-20mA	4-20mA	stop	actuator(s) constant	No Charge
MFT	ACH	4-20mA	2-10V	stop	actuator(s) constant	No Charge
MFT	ACJ	2-10V	2-10V	open	actuator(s) constant	No Charge
MFT	ACK	0.5-10V	0.5-10V	open	actuator(s) constant	No Charge
MFT	ACL	4-20mA	4-20mA	open	actuator(s) constant	No Charge
MFT	ACM	4-20mA	2-10V	open	actuator(s) constant	No Charge
MFT	ACN	2-10V	2-10V	close	actuator(s) constant	No Charge
MFT	ACP	0.5-10V	0.5-10V	close	actuator(s) constant	No Charge
MFT	ACR	4-20mA	4-20mA	close	actuator(s) constant	No Charge
MFT	ACS	4-20mA	2-10V	close	actuator(s) constant	No Charge

Most popular configurations are available at no additional cost. All other configurations carry a $34.00 list price.
Standard delivery may vary, please consult your customer service representative for the latest lead time(s).

K20945 - 04/09 - Subject to change. © Belimo Aircontrols (USA), Inc.

Valve Specifications

Service	chilled, hot water, 60% glycol		
Flow characteristic	modified equal percentage (F6…HS) modified linear (F7…HS)		
Action	90° rotation		
Sizes	2”, 2½”, 3”, 4”, 5”, 6”, 8”, 10”, 12”		
Type of end fitting	125/150 lb. flanged, ASME B16.1		
Materials:			
Body	cast iron, ASTM A126	O-ring	EPDM
Disc	304 stainless steel	Upper bushing	RPTFE
Seats	EPDM	Middle bushings	RPTFE
Body pressure	200 psi at -30°F to +275°F	Lower bushing	RPTFE
Shaft	416 stainless steel		
Flange	For use with ANSI Class 125/150 Flanges		
Media temperature range	-22°F to +250°F [-30°C to +120°C]		
Operating ambient temperature range	-22°F to +150°F [-30°C to +65°C]		
Close-off pressure	200 psi		
Rangeability	10:1 (for 30° to 70° range)		
Maximum velocity	12 FPS		
Body pressure rating	PN16		

F6 SY…

2 YEAR WARRANTY

F6HS 2-way Butterfly Valve with NEMA 4X Industrial Style Actuator

ACTUATOR PART #						SY2-24, SY2-110, SY2-220	SY2-24MFT, SY2-120-MFT, SY2-230MFT	SY3-24, SY3-110, SY3-220	SY3-24MFT, SY3-120-MFT, SY3-230MFT	SY4-24, SY4-110, SY4-220
Control type						On/Off, Floating Pt.	Proportional/MFT	On/Off, Floating Pt.	Proportional/MFT	On/Off, Floating Pt.
Manual override						•	•	•	•	•
Running time						15 seconds	15 seconds	22 seconds	22 seconds	16 seconds
ELECTRICAL CONNECTION:										
Two (2) ½” conduit fittings						•	•	•	•	•
Covered terminal strip						•	•	•	•	•
Butterfly Valve Model #	**C_V 90°**	**C_V 60°**	**Valve Nominal Size Inches**	**DN/mm**	**Close-off psi**					
F650HS	115	44	2”	50	200	$2,252.00	$3,512.00			
F665HS	196	75	2½”	65	200	$2,262.00	$3,522.00			
F680HS	302	116	3”	80	200	$2,280.00	$3,558.00			
F6100HS	600	230	4”	100	200	$2,360.00	$3,626.00			
F6125HS	1022	392	5”	125	200	$2,982.00	$4,262.00			
F6150HS	1579	605	6”	150	200			$3,108.00	$4,362.00	
F6200HS	3136	1202	8”	200	200					$4,512.00
F6250HS	5340	2047	10”	250	200					$5,536.00
F6300HS	8250	3062	12”	300	200					$6,702.00

Standard delivery may vary, please consult your customer service representative for the latest lead time(s).

SY MULTI-FUNCTION TECHNOLOGY

Description	P-CODE	Control Input	Built-in Feedback	Loss of Signal	Running Time	List Price
MFT	ACE	2-10V	2-10V	stop	actuator(s) constant	No Charge
MFT	ACF	0.5-10V	0.5-10V	stop	actuator(s) constant	No Charge
MFT	ACG	4-20mA	4-20mA	stop	actuator(s) constant	No Charge
MFT	ACH	4-20mA	2-10V	stop	actuator(s) constant	No Charge
MFT	ACJ	2-10V	2-10V	open	actuator(s) constant	No Charge
MFT	ACK	0.5-10V	0.5-10V	open	actuator(s) constant	No Charge
MFT	ACL	4-20mA	4-20mA	open	actuator(s) constant	No Charge
MFT	ACM	4-20mA	2-10V	open	actuator(s) constant	No Charge
MFT	ACN	2-10V	2-10V	close	actuator(s) constant	No Charge
MFT	ACP	0.5-10V	0.5-10V	close	actuator(s) constant	No Charge
MFT	ACR	4-20mA	4-20mA	close	actuator(s) constant	No Charge
MFT	ACS	4-20mA	2-10V	close	actuator(s) constant	No Charge

Most popular configurations are available at no additional cost. All other configurations carry a $34.00 list price.
Standard delivery may vary, please consult your customer service representative for the latest lead time(s).

K20945 - 04/09 - Subject to change. © Belimo Aircontrols (USA), Inc.

F6 HS Series Butterfly Valve, Non-Spring Return Actuator

with NEMA 4X Industrial Style Actuator - Full Rated Disc

Valve Specifications

Service	chilled, hot water, 60% glycol
Flow characteristic	modified equal percentage (F6…HS) modified linear (F7…HS)
Action	90° rotation
Sizes	2”, 2½”, 3”, 4”, 5”, 6”, 8”, 10”, 12”, 14”, 16”, 18”, 20”, 24”, 30”
Type of end fitting	125/150 lb. flanged, ASME B16.1

Materials:			
Body	cast iron, ASTM A126	O-ring	EPDM
Disc	304 stainless steel	Upper bushing	RPTFE
Seats	EPDM	Middle bushings	RPTFE
Body pressure	200 psi at -30°F to +275°F	Lower bushing	RPTFE
Shaft	416 stainless steel		

Flange	for use with ANSI Class 125/150 Flanges
Media temperature range	-22°F to +250°F [-30°C to +120°C]
Operating ambient temperature range	-22°F to +150°F [-30°C to +65°C]
Close-off pressure	200 psi (2”-12”) and 150 psi (14”-30”)
Rangeability	10:1 (for 30° to 70° range)
Maximum velocity	12 FPS
Body pressure rating	PN16

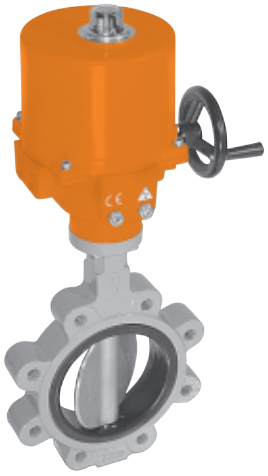

F6 SY…

2 YEAR WARRANTY

F6HS 2-way Butterfly Valve with NEMA 4X Industrial Style Actuator

ACTUATOR PART #						SY4-24MFT, SY4-120MFT, SY4-230MFT	SY5-24, SY5-110, SY5-220	SY5-24MFT, Y5-120MFT, SY5-230MFT	SY6-110, SY6-220	SY6-120MFT, SY6-230MFT	SY8-110, SY8-220
Control type						Proportional/MFT	On/Off, Floating Pt.	Proportional/MFT	On/Off, Floating Pt.	Proportional/MFT	On/Off, Floating Pt.
Manual override						•	•	•	•	•	•
Running time						16 seconds	22 seconds	22 seconds	28 seconds	28 seconds	46 seconds
ELECTRICAL CONNECTION:											
Two (2) ½” conduit fittings						•	•	•	•	•	•
Covered terminal strip						•	•	•	•	•	•
Butterfly Valve Model #	**C_V 90°**	**C_V 60°**	**Valve Nominal Size Inches**	**DN/mm**	**Close-off psi**						
F6200HS	3136	1202	8”	200	200	$5,808.00					
F6250HS	5340	2047	10”	250	200	$6,782.00					
F6300HS	8250	3062	12”	300	200	$8,094.00					
F6350HS	11917	4568	14”	350	150		$7,356.00	$9,994.00			
F6400HS	16388	6282	16”	400	150				$10,084.00	$11,218.00	
F6450HS	21705	8320	18”	450	150						$12,398.00
F6500HS	27908	10698	20”	500	150						$14,978.00

ACTUATOR PART #						SY8-120MFT, SY8-230MFT	SY11-110, SY11-220	SY11-120MFT, SY11-230MFT	SY12-110, SY12-220	SY12-120MFT, SY12-230MFT
Control type						Proportional/MFT	On/Off, Floating Pt.	Proportional/MFT	On/Off, Floating Pt.	Proportional/MFT
Manual override						•	•	•	•	•
Running time						28 seconds	46 seconds	58 seconds	58 seconds	58 seconds
ELECTRICAL CONNECTION:										
Two (2) ½” conduit fittings						•	•	•	•	•
Covered terminal strip						•	•	•	•	•
Butterfly Valve Model #	**C_V 90°**	**C_V 60°**	**Valve Nominal Size Inches**	**DN/mm**	**Close-off psi**					
F6450HS	21705	8320	18”	450	150	$13,788.00				
F6500HS	27908	10698	20”	500	150	$16,676.00				
F6600HS	43116	16528	24”	600	150		$24,746.00	$26,976.00		
F6750HS	73426	28146	30”	750	150				$40,730.00	$41,470.00

Standard delivery may vary, please consult your customer service representative for the latest lead time(s).

K20945 - 04/09 - Subject to change. © Belimo Aircontrols (USA), Inc.

Valve Specifications

Service	chilled, hot water, 60% glycol		
Flow characteristic	modified equal percentage (F6…HS) modified linear (F7…HS)		
Action	90° rotation		
Sizes	2”, 2½”, 3”, 4”, 5”, 6”, 8”, 10”, 12”, 14”, 16”, 18”, 20”, 24”		
Type of end fitting	125/150 lb. flanged, ASME B16.1		
Materials:			
Body	cast iron, ASTM A126	O-ring	EPDM
Disc	304 stainless steel	Upper bushing	RPTFE
Seats	EPDM	Middle bushings	RPTFE
Body pressure	200 psi at -30°F to +275°F	Lower bushing	RPTFE
Shaft	416 stainless steel		
Flange	for use with ANSI Class 125/150 Flanges		
Media temperature range	-22°F to +250°F [-30°C to +120°C]		
Operating ambient temperature range	-22°F to +150°F [-30°C to +65°C]		
Close-off pressure	200 psi (2”-12”) and 150 psi (14”-24”)		
Rangeability	10:1 (for 30° to 70° range)		
Maximum velocity	12 FPS		
Body pressure rating	PN16		

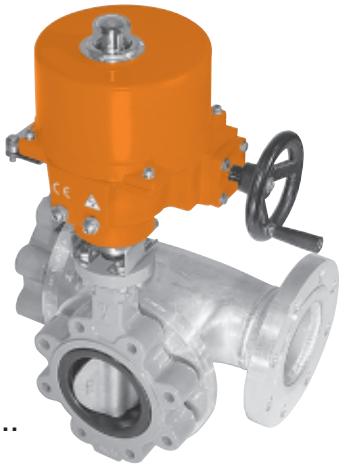

F7 SY…

2 YEAR WARRANTY

F7HS 3-way Butterfly Valve with NEMA 4X Industrial Style Actuator

ACTUATOR PART #						SY2-24, SY2-110, SY2-220	SY2-24MFT, SY2-120MFT, SY2-230MFT	SY3-24, SY3-110, SY3-220	SY3-24MFT, SY3-120MFT, SY3-230-MFT	SY4-24, SY4-110, SY4-220
Control type						On/Off, Floating Pt.	Proportional/MFT	On/Off, Floating Pt.	Proportional/MFT	On/Off, Floating Pt.
Manual override						•	•	•	•	•
Running time						15 seconds	15 seconds	22 seconds	22 seconds	16 seconds
ELECTRICAL CONNECTION:										
Two (2) ½” conduit fittings						•	•	•	•	•
Covered terminal strip						•	•	•	•	•
Butterfly Valve Model #	**C_V 90°**	**C_V 60°**	**Valve Nominal Size Inches**	**DN/mm**	**Close-off psi**					
F750HS	115	44	2”	50	200	$3,528.00	$4,802.00			
F765HS	196	75	2½”	65	200	$3,632.00	$4,866.00			
F780HS	302	116	3 ”	80	200	$3,676.00	$4,936.00			
F7100HS	600	230	4”	100	200	$4,506.00	$5,706.00			
F7125HS	1022	392	5”	125	200			$4,724.00	$6,048.00	
F7150HS	1579	605	6”	150	200			$5,446.00	$6,650.00	
F7200HS	3136	1202	8”	200	200					$6,842.00
F7250HS	5340	2047	10”	250	200					$9,196.00

ACTUATOR PART #						SY4-24MFT, SY4-120MFT, SY4-230MFT	SY5-24, SY5-110, SY5-220	SY5-24MFT, SY5-120MFT, SY5-230MFT	SY6-110, SY6-220	SY6-120MFT, SY6-230MFT
Control type						Proportional/MFT	On/Off, Floating Pt.	Proportional/MFT	On/Off, Floating Pt.	Proportional/MFT
Manual override						•	•	•	•	•
Running time						16 seconds	22 seconds	22 seconds	28 seconds	28 seconds
ELECTRICAL CONNECTION:										
Two (2) ½” conduit fittings						•	•	•	•	•
Covered terminal strip						•	•	•	•	•
Butterfly Valve Model #	**C_V 90°**	**C_V 60°**	**Valve Nominal Size Inches**	**DN/mm**	**Close-off psi**					
F7200HS	3136	1202	8”	200	200	$6,842.00				
F7250HS	5340	2047	10”	250	200	$9,196.00				
F7300HS	8250	3062	12”	300	200		$10,910.00	$12,084.00		
F7350HS	11917	3062	14”	350	150				$17,802.00	$18,926.00

Standard delivery may vary, please consult your customer service representative for the latest lead time(s).

K20945 - 04/09 - Subject to change. © Belimo Aircontrols (USA), Inc.

F7 HS Series Butterfly Valve, Non-Spring Return Actuator

with NEMA 4X Industrial Style Actuator - Full Rated Disc

BELIMO

Valve Specifications

Service	chilled, hot water, 60% glycol
Flow characteristic	modified equal percentage (F6…HS) modified linear (F7…HS)
Action	90° rotation
Sizes	2”, 2½”, 3”, 4”, 5”, 6”, 8”, 10”, 12”, 14”, 16”, 18”, 20”, 24”
Type of end fitting	125/150 lb. flanged, ASME B16.1

Materials:			
Body	cast iron, ASTM A126	O-ring	EPDM
Disc	304 stainless steel	Upper bushing	RPTFE
Seats	EPDM	Middle bushings	RPTFE
Body pressure	200 psi at -30°F to +275°F	Lower bushing	RPTFE
Shaft	416 stainless steel		

Flange	for use with ANSI Class 125/150 Flanges
Media temperature range	-22°F to +250°F [-30°C to +120°C]
Operating ambient temperature range	-22°F to +150°F [-30°C to +65°C]
Close-off pressure	200 psi (2”-12”) and 150 psi (14”-24”)
Rangeability	10:1 (for 30° to 70° range)
Maximum velocity	12 FPS
Body pressure rating	PN16

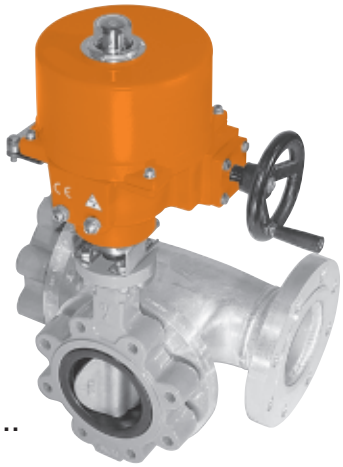

F7 SY…

2 YEAR WARRANTY

F7HS 3-way Butterfly Valve with NEMA 4X Industrial Style Actuator

ACTUATOR PART #						SY7-110, SY7-220	SY7-120MFT, SY7-230MFT	SY8-110, SY8-220	SY8-120MFT, SY8-230MFT	SY9-110, SY9-220	SY9-120MFT, SY9-230MFT	SY12-110, SY12-220	SY12-120-MFT, SY12-230MFT
Control type						On/Off, Floating Pt.	Proportional/ MFT	On/Off, Floating Pt.	Proportional/ MFT	On/Off, Floating Pt.	Proportional/ MFT	On/Off, Floating Pt.	Proportional/ MFT
Manual override						•	•	•	•	•	•	•	•
Running time						46 seconds	46 seconds	46 seconds	46 seconds	58 seconds	46 seconds	58 seconds	58 seconds
ELECTRICAL CONNECTION:													
Two (2) ½” conduit fittings						•	•			•	•	•	•
Covered terminal strip						•	•			•	•	•	•
Butterfly Valve Model #	**Cv 90°**	**Cv 60°**	**Valve Nominal Size Inches**	**DN/mm**	**Close-off psi**								
F7400HS	16388	6282	16”	400	150	$20,580.00	$21,526.00						
F7450HS	21705	8320	18”	450	150			$31,734.00	$34,698.00				
F7500HS	27908	10698	20”	500	150					$38,900.00	$41,830.00		
F7600HS	43116	16528	24”	600	150							$48,930.00	$51,888.00

SY MULTI-FUNCTION TECHNOLOGY

Description	P-CODE	Control Input	Built-in Feedback	Loss of Signal	Running Time	List Price
MFT	ACE	2-10V	2-10V	stop	actuator(s) constant	No Charge
MFT	ACF	0.5-10V	0.5-10V	stop	actuator(s) constant	No Charge
MFT	ACG	4-20mA	4-20mA	stop	actuator(s) constant	No Charge
MFT	ACH	4-20mA	2-10V	stop	actuator(s) constant	No Charge
MFT	ACJ	2-10V	2-10V	open	actuator(s) constant	No Charge
MFT	ACK	0.5-10V	0.5-10V	open	actuator(s) constant	No Charge
MFT	ACL	4-20mA	4-20mA	open	actuator(s) constant	No Charge
MFT	ACM	4-20mA	2-10V	open	actuator(s) constant	No Charge
MFT	ACN	2-10V	2-10V	close	actuator(s) constant	No Charge
MFT	ACP	0.5-10V	0.5-10V	close	actuator(s) constant	No Charge
MFT	ACR	4-20mA	4-20mA	close	actuator(s) constant	No Charge
MFT	ACS	4-20mA	2-10V	close	actuator(s) constant	No Charge

Most popular configurations are available at no additional cost. All other configurations carry a $34.00 list price.
Standard delivery may vary, please consult your customer service representative for the latest lead time(s).

K20945 - 04/09 - Subject to change. © Belimo Aircontrols (USA), Inc.

Valve Specifications

Service	chilled, hot water, 60% glycol		
Flow characteristic	modified equal percentage (F6…150SHP) modified linear (F7…150SHP)		
Action	90° rotation		
Sizes	2”, 2½”, 3”, 4”		
Type of end fitting	125/150 lb. flanged		
Materials:			
Body	Carbon steel full lug	Shaft	17-4 PH stainless
Disc	316 stainless steel	Gland Seal	PTFE
Seats	RPTFE	Bushings	glass backed PTFE
Flange	for use with ANSI Class 125/150 Flanges		
Media temperature range	ANSI Class 150 limitations		
Operating ambient temperature range	-22°F to +122°F [-30°C to + 50°C]		
Close-off pressure	285 psi @ 100°F		
Rangeability	10:1 (for 30° to 70° range)		
Maximum velocity	32 FPS		
Body pressure rating	ANSI Class 150 limitations		

F6 GM… F7 2*GM…

2 YEAR WARRANTY

F6…150SHP 2-way Butterfly Valve with Non-Spring Return Actuator

ACTUATOR PART #						GMB24-3X1	GMX24-MFTX1	2*GMB24-3X1	2*GMX24-MFTX1
Control type						On/Off, Floating Pt.	Proportional	On/Off, Floating Pt.	Proportional
Manual override						•	•	•	•
Running time						150 seconds	90 seconds	150 seconds	90 seconds
Noise level						<45 dB(A)	<45 dB(A)	<45 dB(A)	<45 dB(A)
ELECTRICAL CONNECTION:									
3 ft cable, ½” conduit fittings						•	•	•	•
Butterfly Valve Model #	**C_V 90°**	**C_V 60°**	**Valve Nominal Size Inches**	**DN/mm**	**Close-off psi**				
F650-150SHP	102	56	2”	50	285	$2,888.00	$3,000.00		
F665-150SHP	146	80	2½”	65	285	$2,904.00	$3,014.00		
F680-150SHP	228	125	3”	80	285	$2,922.00	$3,036.00		
F6100-150SHP	451	248	4”	100	150	$3,534.00	$3,646.00		
F6100-150SHP	451	248	4”	100	285			$3,790.00	$4,086.00

F7…150SHP 3-way Butterfly Valve with Non-Spring Return Actuator

ACTUATOR PART #						GMB24-3X1	GMX24-MFTX1	2*GMB24-3X1	2*GMX24-MFTX1
Butterfly Valve Model #	**C_V 90°**	**C_V 60°**	**Valve Nominal Size Inches**	**DN/mm**	**Close-off psi**				
F750-150SHP	102	56	2”	50	150	$5,838.00	$5,944.00		
F765-150SHP	146	80	2½”	65	150	$5,988.00	$6,094.00		
F780-150SHP	228	125	3”	80	150	$5,998.00	$6,104.00	$6,342.00	$6,564.00
F750-150SHP	102	56	2”	50	285			$6,154.00	$6,374.00
F765-150SHP	146	80	2½”	65	285			$6,306.00	$6,526.00
F780-150SHP	228	125	3”	80	285			$6,342.00	$6,564.00

† Specify when ordering Proportional (P-10001) 2-10 VDC, Floating Pt. (P-30001), On/Off (P-40002) for MFT actuators. Note: Specify configuration.

MULTI-FUNCTION TECHNOLOGY

Description	P-CODE	Control Input	Running Time	Built-in Feedback	List Price
P-10001	A01	2-10 VDC	150 seconds	2-10 VDC	No Charge
P-10002	A02	0-10 VDC	150 seconds	0-10 VDC	No Charge
P-10028	A28	0-10 VDC	100 seconds	0-10 VDC	No Charge
P-10063	A63	0.5-4.5 VDC	150 seconds	0.5-4.5 VDC	No Charge
P-10064	A64	5.5-10 VDC	150 seconds	5.5-10 VDC	No Charge
P-20002	W02	0.02-5.00 seconds PWM	150 seconds	2-10 VDC	No Charge
P-20003	W03	0.10-25.5 seconds PWM	150 seconds	2-10 VDC	No Charge
P-30001	F01	Floating Point	150 seconds	2-10 VDC	No Charge
P-40002	J02	On/Off	150 seconds	2-10 VDC	No Charge

All other configurations carry a $34.00 list price.
Standard delivery may vary, please consult your customer service representative for the latest lead time(s).

K20945 - 04/09 - Subject to change. © Belimo Aircontrols (USA), Inc.

F6 ANSI Class 150, Spring Return Actuator

Reinforced Teflon® Seat, 316 Stainless Disc

Valve Specifications

Service	chilled, hot water, 60% glycol, steam to 50 psi		
Flow characteristic	modified equal percentage (F6…150SHP) modified linear (F7…150SHP)		
Action	quarter turn, mechanically limited		
Sizes	2”, 2½”, 3”, 4”		
Type of end fitting	125/150 lb. flanged		
Materials:			
Body	Carbon steel full lug	Shaft	17-4 PH stainless
Disc	316 stainless steel	Gland Seal	TFE
Seats	RTFE	Bushings	glass backed PTFE
Flange	for use with ANSI Class 125/150 Flanges		
Media temperature range	ANSI Class 150 limitations		
Operating ambient temperature range	-22°F to +122°F [-30°C to + 50°C]		
Close-off pressure	285 psi @ 100°F		
Rangeability	10:1 (for 30° to 70° range)		
Maximum velocity	32 FPS		
Body pressure rating	ANSI Class 150 limitations		

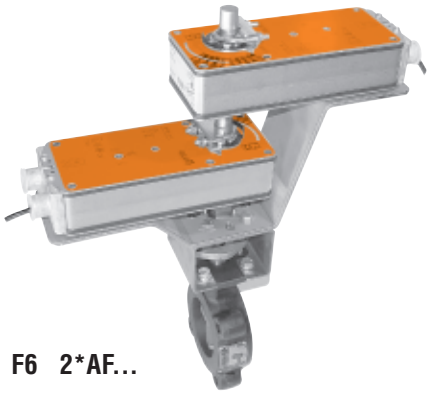

F6 2*AF...

2 YEAR WARRANTY

F6 ANSI Class 150, Spring Return Actuator

ACTUATOR PART #						2*AF24 US	2*AF24-MFT US
Control type						On/Off, Floating Pt.	On/Off, Floating Pt.
Manual override						•	•
Running time						150 seconds	150 seconds
Noise level						<45 dB(A)	<45 dB(A)
ELECTRICAL CONNECTION:							
3 ft cable, ½” conduit fittings						•	•
Butterfly Valve Model #	**C_V 90°**	**C_V 60°**	**Valve Nominal Size Inches**	**DN/mm**	**Close-off psi**		
F650-150SHP	102	56	2”	50	150	$3,240.00	$3,356.00
F665-150SHP	146	80	2½”	65	150	$3,256.00	$3,376.00
F680-150SHP	228	125	3”	80	150	$3,276.00	$3,392.00
F6100-150SHP	451	248	4”	100	150	$3,886.00	$4,002.00

† Specify when ordering Proportional (P-10001) 2-10 VDC, Floating Pt. (P-30001), On/Off (P-40002) for MFT actuators. Note: Specify configuration.

MULTI-FUNCTION TECHNOLOGY

Description	P-CODE	Control Input	Running Time	Built-in Feedback	List Price
P-10001	A01	2-10 VDC	150 seconds	2-10 VDC	No Charge
P-10002	A02	0-10 VDC	150 seconds	0-10 VDC	No Charge
P-10028	A28	0-10 VDC	100 seconds	0-10 VDC	No Charge
P-10063	A63	0.5-4.5 VDC	150 seconds	0.5-4.5 VDC	No Charge
P-10064	A64	5.5-10 VDC	150 seconds	5.5-10 VDC	No Charge
P-20002	W02	0.02-5 seconds PWM	150 seconds	2-10 VDC	No Charge
P-20003	W03	0.10-25.5 seconds PWM	150 seconds	2-10 VDC	No Charge
P-30001	F01	Floating Point	150 seconds	2-10 VDC	No Charge
P-40002	J02	On/Off	150 seconds	2-10 VDC	No Charge

Example: AF24-MFT US is the basic model. Add the programming code pre-set MFT configuration number and list price to the actuator when ordering, as needed.
Note: Most popular configurations available at no additional cost.

OPTIONS	2*AF24-S US	2*AF24-MFT-S US	2*AF120 US	2*AF120-S US	2*AF24-MFT95 US
120 VAC power supply			•	•	
Built-in auxiliary switch**	•	•		•	
0-135 Ω input					•
Butterfly Valve Model #					
F650-150SHP	$3,324.00	$3,442.00	$3,348.00	$3,434.00	$3,378.00
F665-150SHP	$3,342.00	$3,460.00	$3,362.00	$3,450.00	$3,396.00
F680-150SHP	$3,360.00	$3,478.00	$3,384.00	$3,468.00	$3,412.00
F6100-150SHP	$3,970.00	$4,088.00	$3,994.00	$4,080.00	$4,022.00

** For tandem actuators – only one of the two actuators is provided with switch.
Standard delivery may vary, please consult your customer service representative for the latest lead time(s).

K20945 - 04/09 - Subject to change. © Belimo Aircontrols (USA), Inc.

Valve Specifications

Service	chilled, hot water, 60% glycol, steam to 50 psi		
Flow characteristic	modified equal percentage (F6…150SHP) modified linear (F7…150SHP)		
Action	quarter turn, mechanically limited		
Sizes	2”, 2½”, 3”, 4”, 5”, 6”, 8”, 10”, 12”, 14”, 16”, 18”, 20”, 24”, 30”		
Type of end fitting	125/150 lb. flanged		
Materials:			
Body	Carbon steel full lug	Shaft	17-4 PH stainless
Disc	316 stainless steel	Gland Seal	TFE
Seats	RTFE	Bushings	glass backed PTFE
Flange	for use with ANSI Class 125/150 Flanges		
Media temperature range	ANSI Class 150 limitations		
Operating ambient temperature range	-22°F to +150°F [-30°C to + 65°C]		
Close-off pressure	285 psi @ 100°F		
Rangeability	10:1 (for 30° to 70° range)		
Maximum velocity	32 FPS		
Body pressure rating	ANSI Class 150 limitations		

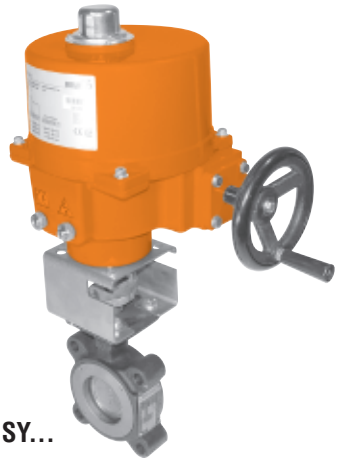

F6 SY…

2 YEAR WARRANTY

F6…150SHP 2-way Butterfly Valve with NEMA 4X Industrial Style Actuator

ACTUATOR PART #						SY2-24, SY2-110, SY2-220	SY2-24MFT, SY2-120MFT, SY2-230MFT	SY3-24, SY3-110, SY3-220	SY3-24MFT, SY3-120MFT, SY3-230MFT	SY4-24, SY4-110, SY4-220	SY4-24MFT, SY4-120MFT, SY4-230MFT
Control type						On/Off, Floating Pt.	Proportional/ MFT	On/Off, Floating Pt.	Proportional/ MFT	On/Off, Floating Pt.	Proportional/ MFT
Manual override						•	•	•	•	•	•
Running time						15 seconds	15 seconds	22 seconds	22 seconds	16 seconds	16 seconds
ELECTRICAL CONNECTION:											
Two (2) ½” conduit fittings						•	•	•	•	•	•
Covered terminal strip						•	•	•	•	•	•
Butterfly Valve Model #	**Cv 90°**	**Cv 60°**	**Valve Nominal Size Inches**	**DN/mm**	**Close-off psi**						
F650-150SHP	102	56	2”	50	285	$4,578.00	$6,298.00				
F665-150SHP	146	80	2½”	65	285	$4,598.00	$6,314.00				
F680-150SHP	228	125	3”	80	285	$4,616.00	$6,334.00				
F6100-150SHP	451	248	4”	100	285	$5,226.00	$6,944.00				
F6125-150SHP	714	392	5”	125	285	$6,512.00	$8,230.00				
F6150-150SHP	1103	607	6”	150	285	$6,548.00	$8,268.00				
F6200-150SHP	2064	1135	8”	200	150			$7,896.00	$9,626.00		
F6200-150SHP	2064	1135	8”	200	285					$8,394.00	$10,382.00
F6250-150SHP	3517	1934	10”	250	285					$11,368.00	$13,356.00
F6300-150SHP	4837	2660	12”	300	150					$13,896.00	$15,886.00

Please add desired voltage to model number. Ex: F6500-150SHP+SY9-110. Note: Specify configuration.

SY MULTI-FUNCTION TECHNOLOGY

Description	P-CODE	Control Input	Built-in Feedback	Loss of Signal	Running Time	List Price
MFT	ACE	2-10V	2-10V	stop	actuator(s) constant	No Charge
MFT	ACF	0.5-10V	0.5-10V	stop	actuator(s) constant	No Charge
MFT	ACG	4-20mA	4-20mA	stop	actuator(s) constant	No Charge
MFT	ACH	4-20mA	2-10V	stop	actuator(s) constant	No Charge
MFT	ACJ	2-10V	2-10V	open	actuator(s) constant	No Charge
MFT	ACK	0.5-10V	0.5-10V	open	actuator(s) constant	No Charge
MFT	ACL	4-20mA	4-20mA	open	actuator(s) constant	No Charge
MFT	ACM	4-20mA	2-10V	open	actuator(s) constant	No Charge
MFT	ACN	2-10V	2-10V	close	actuator(s) constant	No Charge
MFT	ACP	0.5-10V	0.5-10V	close	actuator(s) constant	No Charge
MFT	ACR	4-20mA	4-20mA	close	actuator(s) constant	No Charge
MFT	ACS	4-20mA	2-10V	close	actuator(s) constant	No Charge

Most popular configurations are available at no additional cost. All other configurations carry a $34.00 list price.
Standard delivery may vary, please consult your customer service representative for the latest lead time(s).

K20945 - 04/09 - Subject to change. © Belimo Aircontrols (USA), Inc.

F6 ANSI Class 150, Non-Spring Return Actuator

Reinforced Teflon® Seat, 316 Stainless Disc with NEMA 4X Industrial Style Actuator

BELIMO

Valve Specifications

Service	chilled, hot water, 60% glycol, steam to 50 psi		
Flow characteristic	modified equal percentage (F6…150SHP) modified linear (F7…150SHP)		
Action	quarter turn, mechanically limited		
Sizes	2”, 2½”, 3”, 4”, 5”, 6”, 8”, 10”, 12”, 14”, 16”, 18”, 20”, 24”, 30”		
Type of end fitting	125/150 lb. flanged		
Materials:			
Body	Carbon steel full lug	Shaft	17-4 PH stainless
Disc	316 stainless steel	Gland Seal	TFE
Seats	RTFE	Bushings	glass backed PTFE
Flange	for use with ANSI Class 125/150 Flanges		
Media temperature range	ANSI Class 150 limitations		
Operating ambient temperature range	-22°F to +150°F [-30°C to +65°C]		
Close-off pressure	285 psi @ 100°F		
Rangeability	10:1 (for 30° to 70° range)		
Maximum velocity	32 FPS		
Body pressure rating	ANSI Class 150 limitations		

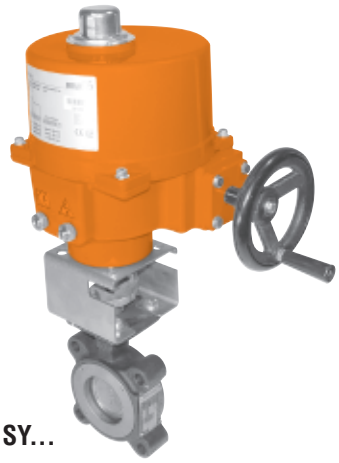

F6 SY…

2 YEAR WARRANTY

F6…150SHP 2-way Butterfly Valve with NEMA 4X Industrial Style Actuator

ACTUATOR PART #						SY5-24, SY5-110, SY5-220	SY5-24MFT, SY5-120MFT, SY5-230MFT	SY7-110, SY7-220	SY7-120MFT, SY7-230MFT	SY8-110, SY8-220	SY8-120MFT, SY8-230MFT
Control type						On/Off, Floating Pt.	Proportional/ MFT	On/Off, Floating Pt.	Proportional/MFT	On/Off, Floating Pt.	Proportional/MFT
Manual override						•	•	•	•	•	•
Running time						22 seconds	22 seconds	46 seconds	46 seconds	46 seconds	46 seconds
ELECTRICAL CONNECTION:											
Two (2) ½” conduit fittings						•	•	•	•	•	•
Covered terminal strip						•	•	•	•	•	•
Butterfly Valve Model #	**C_V 90°**	**C_V 60°**	**Valve Nominal Size Inches**	**DN/mm**	**Close-off psi**						
F6300-150SHP	4837	2660	12”	300	285	$14,236.00	$16,216.00				
F6350-150SHP	6857	3592	14”	350	150	$17,712.00	$19,704.00				
F6350-150SHP	6857	3592	14”	350	285			$18,864.00	$20,800.00		
F6400-150SHP	9287	4865	16”	400	285			$26,150.00	$28,086.00		
F6450-150SHP	11500	3270	18”	450	150			$30,330.00	$32,268.00		
F6450-150SHP	11500	3270	18”	450	285					$31,628.00	$33,570.00
F6500-150SHP	14420	7590	20”	500	150					$38,614.00	$40,552.00

ACTUATOR PART #						SY9-110, SY9-220	SY9-120MFT, SY9-230MFT	SY10-110, SY10-220	SY10-120MFT, SY10-230MFT	SY12-110, SY12-220	SY12-120MFT, SY12-230MFT
Control type						On/Off, Floating Pt.	Proportional/MFT	On/Off, Floating Pt.	Proportional/MFT	On/Off, Floating Pt.	Proportional/MFT
Manual override						•	•	•	•	•	•
Running time						58 seconds	58 seconds	58 seconds	58 seconds	58 seconds	58 seconds
ELECTRICAL CONNECTION:											
Two (2) ½” conduit fittings						•	•	•	•	•	•
Covered terminal strip						•	•	•	•	•	•
Butterfly Valve Model #	**C_V 90°**	**C_V 60°**	**Valve Nominal Size Inches**	**DN/mm**	**Close-off psi**						
F6500-150SHP	14420	7590	20”	500	285	$39,858.00	$41,798.00				
F6600-150SHP	22050	11550	24”	600	150			$53,314.00	$55,254.00		
F6750-150SHP	34388	18012	30”	750	125					$92,784.00	$94,534.00

Please add desired voltage to model number. Ex: F6500-150SHP+SY9-120MFT. Note: Specify configuration.
Standard delivery may vary, please consult your customer service representative for the latest lead time(s).

K20945 - 04/09 - Subject to change. © Belimo Aircontrols (USA), Inc.

F7 ANSI Class 150, Non-Spring Return Actuator

Reinforced Teflon® Seat, 316 Stainless Disc with NEMA 4X Industrial Style Actuator

Valve Specifications

Service	chilled, hot water, 60% glycol, steam to 50 psi		
Flow characteristic	modified linear (F7…150SHP), unidirectional		
Action	quarter turn, mechanically limited		
Sizes	2”, 2½”, 3”, 4”, 5”, 6”, 8”, 10”, 12”, 14”, 16”, 18”, 20”, 24”		
Materials:			
Body	Carbon steel full lug	Shaft	17-4 PH stainless
Disc	316 stainless steel	Gland Seal	TFE
Seats	RTFE	Bushings	glass backed PTFE
Type of end fitting	125/150 lb. flanged		
Body pressure	ANSI Class 150 rated		
Flange	for use with ANSI Class 125/150 flanges		
Media temperature range	ANSI Class 150 limitations		
Operating ambient temperature range	-22°F to +150° F [-30°C to +65°C]		
Close-off pressure	285 psi @ 100°F		
Rangeability	10:1 (for 30° to 70° range)		
Maximum velocity	32 FPS		
Body pressure rating	ANSI Class 150 limitations		

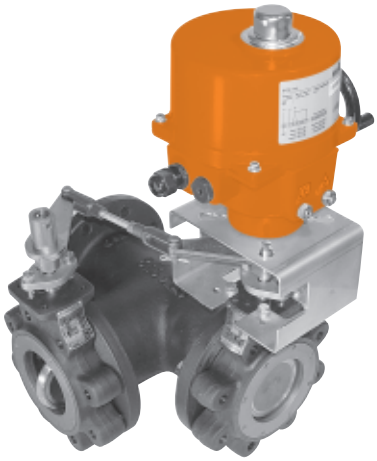

F7 SY…

2 YEAR WARRANTY

F7…150SHP 3-way Butterfly Valve with NEMA 4X Industrial Style Actuator

ACTUATOR PART #						SY2-24, SY2-110, SY2-220	SY2-24MFT, SY2-120MFT, SY2-230MFT	SY3-24, SY3-110, SY3-220	SY3-24MFT, SY3-120MFT, SY3-230MFT	SY4-24, SY4-110, SY4-220	SY4-24MFT, SY4-120MFT, SY4-230MFT
Control type						On/Off, Floating Pt.	Proportional/MFT	On/Off, Floating Pt.	Proportional/MFT	On/Off, Floating Pt.	Proportional/MFT
Manual override						•	•	•	•	•	•
Running time						15 seconds	15 seconds	22 seconds	22 seconds	16 seconds	16 seconds
ELECTRICAL CONNECTION:											
Two (2) ½” conduit fittings						•	•	•	•	•	•
Covered terminal strip						•	•	•	•	•	•
Butterfly Valve Model #	**C_V 90°**	**C_V 60°**	**Valve Nominal Size Inches**	**DN/mm**	**Close-off psi**						
F750-150SHP	102	56	2”	50	285	$7,546.00	$9,264.00				
F765-150SHP	146	80	2½”	65	285	$7,700.00	$9,418.00				
F780-150SHP	228	125	3”	80	285	$7,710.00	$9,426.00				
F7100-150SHP	451	248	4”	100	285	$9,084.00	$10,796.00				
F7125-150SHP	714	392	5”	125	285			$12,206.00	$13,932.00		
F7150-150SHP	1103	607	6”	150	285			$12,214.00	$13,940.00		
F7200-150SHP	2064	1135	8”	200	285					$15,718.00	$17,708.00
F7250-150SHP	3517	1934	10”	250	150					$22,770.00	$24,760.00

ACTUATOR PART #						SY5-24, SY5-110, SY5-220	SY5-24MFT, SY5-120MFT, SY5-230MFT	SY7-110, SY7-220	SY7-120MFT, SY7-230MFT	SY8-110, SY8-220	SY8-120MFT, SY8-230MFT
Control type						On/Off, Floating Pt.	Proportional/ MFT	On/Off, Floating Pt.	Proportional/MFT	On/Off, Floating Pt.	Proportional/MFT
Manual override						•	•	•	•	•	•
Running time						22 seconds	22 seconds	46 seconds	46 seconds	46 seconds	46 seconds
ELECTRICAL CONNECTION:											
Two (2) ½” conduit fittings						•	•	•	•	•	•
Covered terminal strip						•	•	•	•	•	•
Butterfly Valve Model #	**C_V 90°**	**C_V 60°**	**Valve Nominal Size Inches**	**DN/mm**	**Close-off psi**						
F7250-150SHP	3517	1934	10”	250	285	$23,114.00	$25,108.00				
F7300-150SHP	4837	2660	12”	300	150	$29,440.00	$31,430.00				
F7300-150SHP	4837	2660	12”	300	285			$30,592.00	$32,530.00		
F7350-150SHP	6857	3592	14”	350	285			$40,790.00	$42,730.00		
F7400-150SHP	9287	4865	16”	400	150			$57,450.00	$59,390.00		
F7450-150SHP	11500	3270	18”	450	150					$69,034.00	$70,972.00

Standard delivery may vary, please consult your customer service representative for the latest lead time(s).

K20945 - 04/09 - Subject to change. © Belimo Aircontrols (USA), Inc.

F7 ANSI Class 150, Non-Spring Return Actuator

Reinforced Teflon® Seat, 316 Stainless Disc with NEMA 4X Industrial Style Actuator

Valve Specifications

Service	chilled, hot water, 60% glycol, steam to 50 psi		
Flow characteristic	modified linear (F7…150SHP), unidirectional		
Action	quarter turn, mechanically limited		
Sizes	2”, 2½”, 3”, 4”, 5”, 6”, 8”, 10”, 12”, 14”, 16”, 18”, 20”, 24”		
Materials:			
Body	Carbon steel full lug	Shaft	17-4 PH stainless
Disc	316 stainless steel	Gland Seal	TFE
Seats	RTFE	Bushings	glass backed PTFE
Type of end fitting	125/150 lb. flanged		
Body Pressure	ANSI Class 150 rated		
Flange	for use with ANSI Class 125/150 flanges		
Media temperature range	ANSI Class 150 limitations		
Operating ambient temperature range	-22°F to +150° F [-30°C to +65°C]		
Close-off pressure	285 psi @ 100°F		
Rangeability	10:1 (for 30° to 70° range)		
Maximum velocity	32 FPS		
Body pressure rating	ANSI Class 150 limitations		

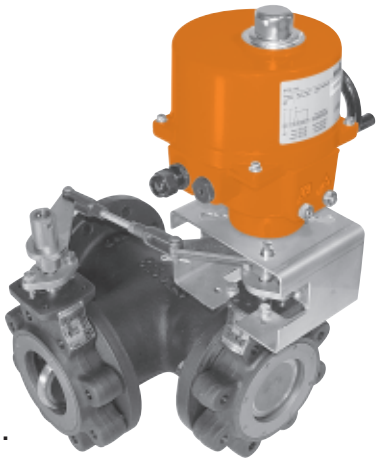

F7 SY...

2 YEAR WARRANTY

F7…150SHP 3-way Butterfly Valve with NEMA 4X Industrial Style Actuator

ACTUATOR PART #						SY9-110, SY9-220	SY9-120MFT, SY9-230MFT	SY10-110, SY10-220	SY10-120MFT, SY10-230MFT
Control type						On/Off, Floating Pt.	Proportional/MFT	On/Off, Floating Pt.	Proportional/MFT
Manual override						•	•	•	•
Running time						58 seconds	58 seconds	58 seconds	58 seconds
ELECTRICAL CONNECTION:									
Two (2) ½” conduit fittings						•	•	•	•
Covered terminal strip						•	•	•	•
Butterfly Valve Model #	**Cv 90°**	**Cv 60°**	**Valve Nominal Size Inches**	**DN/mm**	**Close-off psi**				
F7400-150SHP	9287	4865	16”	400	285	$59,994.00	$61,934.00		
F7450-150SHP	11500	3270	18”	450	285			$70,590.00	$72,530.00
F7500-150SHP	14420	7590	20”	500	150	$88,960.00	$90,900.00		

ACTUATOR PART #						SY11-110, SY11-220	SY11-120MFT, SY11-230MFT	SY12-110, SY12-220	SY12-120MFT, SY12-230MFT
Control type						On/Off, Floating Pt.	Proportional/MFT	On/Off, Floating Pt.	Proportional/MFT
Manual override						•	•	•	•
Running time						58 seconds	58 seconds	58 seconds	58 seconds
ELECTRICAL CONNECTION:									
Two (2) ½” conduit fittings						•	•	•	•
Covered terminal strip						•	•	•	•
Butterfly Valve Model #	**Cv 90°**	**Cv 60°**	**Valve Nominal Size Inches**	**DN/mm**	**Close-off psi**				
F7500-150SHP	14420	7590	20”	500	285	$91,458.00	$93,398.00		
F7600-150SHP	22050	11550	24”	600	150			$128,480.00	$130,418.00

Standard delivery may vary, please consult your customer service representative for the latest lead time(s).

SY MULTI-FUNCTION TECHNOLOGY

Description	P-CODE	Control Input	Built-in Feedback	Loss of Signal	Running Time	List Price
MFT	ACE	2-10V	2-10V	stop	actuator(s) constant	No Charge
MFT	ACF	0.5-10V	0.5-10V	stop	actuator(s) constant	No Charge
MFT	ACG	4-20mA	4-20mA	stop	actuator(s) constant	No Charge
MFT	ACH	4-20mA	2-10V	stop	actuator(s) constant	No Charge
MFT	ACJ	2-10V	2-10V	open	actuator(s) constant	No Charge
MFT	ACK	0.5-10V	0.5-10V	open	actuator(s) constant	No Charge
MFT	ACL	4-20mA	4-20mA	open	actuator(s) constant	No Charge
MFT	ACM	4-20mA	2-10V	open	actuator(s) constant	No Charge
MFT	ACN	2-10V	2-10V	close	actuator(s) constant	No Charge
MFT	ACP	0.5-10V	0.5-10V	close	actuator(s) constant	No Charge
MFT	ACR	4-20mA	4-20mA	close	actuator(s) constant	No Charge
MFT	ACS	4-20mA	2-10V	close	actuator(s) constant	No Charge

All other configurations carry a $34.00 list price.

Standard delivery may vary, please consult your customer service representative for the latest lead time(s).

K20945 - 04/09 - Subject to change. © Belimo Aircontrols (USA), Inc.

Valve Specifications

Service	chilled, hot water, 60% glycol, steam to 50 psi		
Flow characteristic	modified equal percentage (F6…300SHP), unidirectional modified linear (F7...300 SHP)		
Recommended install	SUS (seat up stream)		
Action	quarter turn, mechanically limited		
Sizes	2”, 2½”, 3”, 4”		
Type of end fitting	ANSI Class 250/300 flanged		
Materials:			
Body	Carbon steel full lug	Shaft	17 - 4 PH stainless
Disc	316 stainless steel	Gland Seal	TFE
Seats	RTFE	Bushings	glass backed PTFE
Body pressure	ANSI Class 300 rated		
Flange	for use with ANSI Class 250/300 flanges		
Media temperature range	ANSI Class 300 limitations		
Operating ambient temperature range	-22°F to +122°F [-30°C to +50°C]		
Close-off pressure	725 psi @ 100°F		
Rangeability	10:1 (for 30°F to 70°F)		
Maximum velocity	32 FPS		
Body pressure rating	ANSI Class 300 limitations		

F6 GM… F7 2*GM…

2 YEAR WARRANTY

F6…300SHP 2-way Butterfly Valve with Non-Spring Return Actuator

ACTUATOR PART #						GMB24-3X1	GMX24-MFTX1	2*GMB24-3X1	2*GMX24-MFTX1
Control type						On/Off, Floating Pt.	Proportional/MFT	On/Off, Floating Pt.	Proportional/MFT
Manual override						•	•	•	•
Running time						150 seconds	90 seconds	150 seconds	90 seconds
Noise level						<45 dB(A)	<45 dB(A)	<45 dB(A)	<45 dB(A)
ELECTRICAL CONNECTION:									
Two (2) ½” conduit fittings						•	•	•	•
Covered terminal strip						•	•	•	•
Butterfly Valve Model #	**C_V 90°**	**C_V 60°**	**Valve Nominal Size Inches**	**DN/mm**	**Close-off psi**				
F650-300SHP	100	52	2”	50	285	$3,232.00	$3,342.00		
F665-300SHP	143	75	2½”	65	285	$3,246.00	$3,360.00		
F680-300SHP	117	223	3”	80	285	$3,268.00	$3,378.00		
F6100-300SHP	435	228	4”	100	150	$3,786.00	$3,896.00		
F650-300SHP	100	52	2”	50	400			$3,562.00	$3,774.00
F665-300SHP	143	75	2½”	65	400			$3,582.00	$3,794.00
F680-300SHP	117	223	3”	80	400			$3,596.00	$3,808.00
F6100-300SHP	435	228	4”	100	285			$4,114.00	$4,336.00

F7…300SHP 3-way Butterfly Valve with Non-Spring Return Actuator

ACTUATOR PART #						2*GMB24-3X1	2*GMX24-MFTX1
F750-300SHP	100	52	2”	50	285	$7,366.00	$7,586.00
F765-300SHP	143	75	2½”	65	285	$7,666.00	$8,772.00
F780-300SHP	223	117	3”	80	285	$8,740.00	$8,960.00
F7100-300SHP	435	228	4”	100	150	$10,840.00	$11,052.00

MULTI-FUNCTION TECHNOLOGY

Description	P-CODE	Control Input	Running Time	Built-in Feedback	List Price
P-10001	A01	2-10 VDC	150 seconds	2-10 VDC	No Charge
P-10002	A02	0-10 VDC	150 seconds	0-10 VDC	No Charge
P-10028	A28	0-10 VDC	100 seconds	0-10 VDC	No Charge
P-10063	A63	0.5-4.5 VDC	150 seconds	0.5-4.5 VDC	No Charge
P-10064	A64	5.5-10 VDC	150 seconds	5.5-10 VDC	No Charge
P-20002	W02	0.02-5 seconds PWM	150 seconds	2-10 VDC	No Charge
P-20003	W03	0.10-25.5 seconds PWM	150 seconds	2-10 VDC	No Charge
P-30001	F01	Floating Point	150 seconds	2-10 VDC	No Charge
P-40002	J02	On/Off	150 seconds	2-10 VDC	No Charge

All other configurations carry a $34.00 list price.
Standard delivery may vary, please consult your customer service representative for the latest lead time(s).

K20945 - 04/09 - Subject to change. © Belimo Aircontrols (USA), Inc.

F6 ANSI 300 Class, Spring Return Actuator

Reinforced Teflon® Seat, 316 Stainless Disc

Valve Specifications

Service	chilled, hot water, 60% glycol, steam to 50 psi		
Flow characteristic	modified equal percentage (F6…300SHP), unidirectional		
Recommended install	SUS (seat up stream)		
Action	quarter turn, mechanically limited		
Sizes	2”, 2½”, 3”, 4”		
Type of end fitting	ANSI Class 250/300 flanged		
Materials:			
Body	Carbon steel full lug	Shaft	17 - 4 PH stainless
Disc	316 stainless steel	Gland Seal	TFE
Seats	RTFE	Bushings	glass backed PTFE
Body pressure	ANSI Class 300 rated		
Flange	for use with ANSI Class 250/300 flanges		
Media temperature range	ANSI Class 300 limitations		
Operating ambient temperature range	-22°F to +122°F [-30°C to +50°C]		
Close-off pressure	725 psi @ 100°F		
Rangeability	10:1 (for 30°F to 70°F)		
Maximum velocity	32 FPS		
Body pressure rating	ANSI Class 300 limitations		

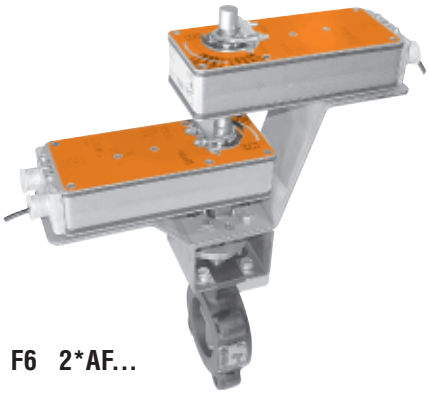

F6 2*AF…

2 YEAR WARRANTY

F6…300SHP 2-way Butterfly Valve with Non-Spring Return Actuator

ACTUATOR PART #						2*AF24 US	2*AF24-MFT US
Control type						On/Off, Floating Pt. †	Proportional/MFT †
Manual override						•	•
Running time					motor	150 seconds	150 seconds
					spring	<20 seconds	<20 seconds
Noise level						<45 dB(A)	<45 dB(A)
ELECTRICAL CONNECTION:							
3 ft cable, ½” conduit fitting						•	•
Butterfly Valve Model #	**C_V 90°**	**C_V 60°**	**Valve Nominal Size Inches**	**DN/mm**	**Close-off psi**		
F650-300SHP	100	52	2”	50	150	$3,582.00	$3,702.00
F665-300SHP	143	75	2½”	65	150	$3,600.00	$3,716.00
F680-300SHP	223	117	3”	80	150	$3,618.00	$3,734.00
F6100-300SHP	435	228	4”	100	150	$4,136.00	$4,252.00

† Specify when ordering Proportional (P-10001) 2-10 VDC, Floating Pt. (P-30001), On/Off (P-40002) for MFT actuators. Note: Specify configuration.

MULTI-FUNCTION TECHNOLOGY

Description	P-CODE	Control Input	Running Time	Built-in Feedback	List Price
P-10001	A01	2-10 VDC	150 seconds	2-10 VDC	No Charge
P-10002	A02	0-10 VDC	150 seconds	0-10 VDC	No Charge
P-10028	A28	0-10 VDC	100 seconds	0-10 VDC	No Charge
P-10063	A63	0.5-4.5 VDC	150 seconds	0.5-4.5 VDC	No Charge
P-10064	A64	5.5-10 VDC	150 seconds	5.5-10 VDC	No Charge
P-20002	W02	0.02-5 seconds PWM	150 seconds	2-10 VDC	No Charge
P-20003	W03	0.10-25.5 seconds PWM	150 seconds	2-10 VDC	No Charge
P-30001	F01	Floating Point	150 seconds	2-10 VDC	No Charge
P-40002	J02	On/Off	150 seconds	2-10 VDC	No Charge

Example: AF24-MFT US is the basic model. Add the programming code pre-set MFT configuration number and list price to the actuator when ordering, as needed.
Note: Most popular configurations available at no additional cost.

OPTIONS	2*AF24-S US	2*AF24-MFT-S US	2*AF120 US	2*AF120-S US
120 VAC power supply			•	•
Built-in auxiliary switch	•	•		•
Butterfly Valve Model #				
F650-300SHP	$3,666.00	$3,788.00	$3,686.00	$3,770.00
F665-300SHP	$3,686.00	$3,802.00	$3,704.00	$3,790.00
F680-300SHP	$3,704.00	$3,820.00	$3,722.00	$3,808.00
F6100-300SHP	$4,222.00	$4,338.00	$4,240.00	$4,326.00

K20945 - 04/09 - Subject to change. © Belimo Aircontrols (USA), Inc.

Valve Specifications

Service	chilled, hot water, 60% glycol, steam to 50 psi		
Flow characteristic	modified equal percentage (F6…300SHP), unidirectional		
Recommended install	SUS (seat up stream)		
Action	quarter turn, mechanically limited		
Sizes	2”, 2½”, 3”, 4”, 5”, 6”, 8”, 10”, 12”, 14”, 16”, 18”, 20”, 24”		
Materials:			
Body	Carbon steel full lug	Shaft	17 - 4 PH stainless
Disc	316 stainless steel	Gland Seal	TFE
Seats	RTFE	Bushings	glass backed PTFE
Type of end fitting	ANSI Class 250/300 flanged		
Body pressure	ANSI Class 300 rated		
Flange	for use with ANSI Class 250/300 flanges		
Media temperature range	ANSI Class 300 limitations		
Operating ambient temperature range	-22°F to +150°F [-30°C to +65°C]		
Close-off pressure	725 psi @ 100°F		
Rangeability	10:1 (for 30°F to 70°F)		
Maximum velocity	32 FPS		
Body pressure rating	ANSI Class 300 limitations		

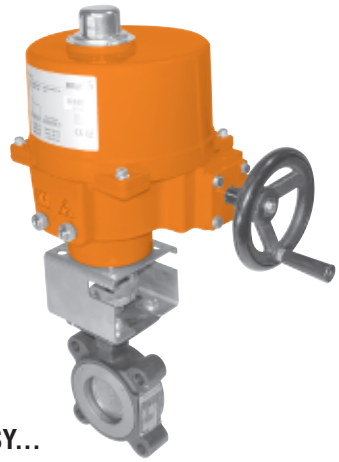

F6 SY…

2 YEAR WARRANTY

F6…300SHP 2-way Butterfly Valve with NEMA 4X Industrial Style Actuator

ACTUATOR PART #						SY2-24, SY2-110, SY2-220	SY2-24MFT, SY2-120MFT, SY2-230MFT	SY3-24, SY3-110, SY3-220	SY3-24MFT, SY3-120MFT, SY3-230MFT	SY4-24, SY4-110, SY4-220	SY4-24MFT, SY4-120MFT, SY4-230MFT
Control type						On/Off, Floating Pt.	Proportional/MFT	On/Off, Floating Pt.	Proportional/MFT	On/Off, Floating Pt.	Proportional/MFT
Manual override						•	•	•	•	•	•
Running time						15 seconds	15 seconds	22 seconds	22 seconds	16 seconds	16 seconds
ELECTRICAL CONNECTION:											
Two (2) ½” conduit fittings						•	•	•	•	•	•
Covered terminal strip						•	•	•	•	•	•
Butterfly Valve Model #	**C_V 90°**	**C_V 60°**	**Valve Nominal Size Inches**	**DN/mm**	**Close-off psi**						
F650-300SHP	100	52	2”	50	600	$4,924.00	$6,642.00				
F665-300SHP	143	75	2½”	65	600	$4,940.00	$6,658.00				
F680-300SHP	223	117	3”	80	600	$4,958.00	$6,678.00				
F6100-300SHP	435	228	4”	100	600	$5,476.00	$7,194.00				
F6125-300SHP	688	361	5”	125	285	$7,180.00	$8,900.00				
F6125-300SHP	688	361	5”	125	600			$7,408.00	$9,136.00		
F6150-300SHP	1041	546	6”	150	285	$7,218.00	$10,020.00				
F6150-300SHP	1041	546	6”	150	600			$7,444.00	$9,174.00		
F6200-300SHP	1911	1001	8”	200	150			$9,416.00	$11,148.00		
F6200-300SHP	1911	1001	8”	200	600					$9,914.00	$11,906.00
F6250-300SHP	3194	1673	10”	250	285					$14,386.00	$16,376.00
F6300-300SHP	4428	2319	12”	300	150					$18,410.00	$20,404.00

Please add desired voltage to model number. Ex: F680-300SHP+SY2-120MFT. Note: Specify configuration.
Standard delivery may vary, please consult your customer service representative for the latest lead time(s).

K20945 - 04/09 - Subject to change. © Belimo Aircontrols (USA), Inc.

F6 ANSI 300 Class, Non-Spring Return Actuator

Reinforced Teflon® Seat, 316 Stainless Disc with NEMA 4X Industrial Style Actuator

Valve Specifications

Service	chilled, hot water, 60% glycol, steam to 50 psi		
Flow characteristic	modified equal percentage (F6…300SHP), unidirectional		
Recommended install	SUS (seat up stream)		
Action	quarter turn, mechanically limited		
Sizes	2”, 2½”, 3”, 4”, 5”, 6”, 8”, 10”, 12”, 14”, 16”, 18”, 20”, 24”		
Materials:			
Body	Carbon steel full lug	Shaft	17 - 4 PH stainless
Disc	316 stainless steel	Gland Seal	TFE
Seats	RTFE	Bushings	glass backed PTFE
Type of end fitting	ANSI Class 250/300 flanged		
Body pressure	ANSI Class 300 rated		
Flange	for use with ANSI Class 250/300 flanges		
Media temperature range	ANSI Class 300 limitations		
Operating ambient temperature range	-22°F to +150°F [-30°C to +65°C]		
Close-off pressure	725 psi @ 100°F		
Rangeability	10:1 (for 30°F to 70°F)		
Maximum velocity	32 FPS		
Body Pressure Rating	ANSI Class 300 limitations		

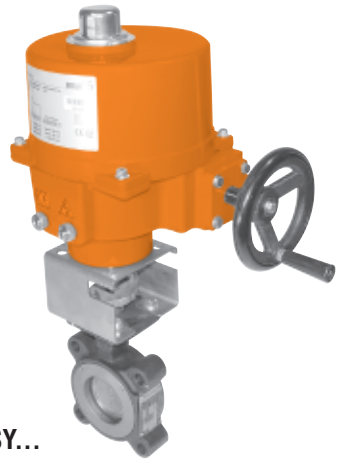

F6 SY…

2 YEAR WARRANTY

F6…300SHP 2-way Butterfly Valve with NEMA 4X Industrial Style Actuator

ACTUATOR PART #						SY5-24, SY5-110, SY5-220	SY5-24MFT, SY5-120MFT, SY5-230MFT	SY7-110, SY7-220	SY7-120MFT, SY7-230MFT	SY8-110, SY8-220	SY8-120MFT, SY8-230MFT
Control type						On/Off, Floating Pt.	Proportional/MFT	On/Off, Floating Pt.	Proportional/MFT	On/Off, Floating Pt.	Proportional/MFT
Manual override						•	•	•	•	•	•
Running time						22 seconds	22 seconds	46 seconds	46 seconds	46 seconds	46 seconds
ELECTRICAL CONNECTION:											
Two (2) ½” conduit fittings						•	•	•	•	•	•
Covered terminal strip						•	•	•	•	•	•
Butterfly Valve Model #	**C_V 90°**	**C_V 60°**	**Valve Nominal Size Inches**	**DN/mm**	**Close-off psi**						
F6250-300SHP	3194	1673	10”	250	400	$14,726.00	$16,718.00				
F6250-300SHP	3194	1673	10”	250	600			$15,878.00	$17,818.00		
F6300-300SHP	4428	2319	12”	300	285	$18,752.00	$20,746.00				
F6300-300SHP	4428	2319	12”	300	600			$19,904.00	$21,842.00		
F6350-300SHP	5702	2986	14”	350	150	$30,388.00	$32,382.00				
F6350-300SHP	5702	2986	14”	350	400			$31,542.00	$33,480.00		
F6350-300SHP	5702	2986	14”	350	600					$32,840.00	$34,780.00
F6400-300SHP	8243	3988	16”	400	150			$33,576.00	$35,514.00		
F6400-300SHP	8243	3988	16”	400	285					$34,874.00	$36,814.00
F6450-300SHP	9712	5088	18”	450	150			$42,888.00	$44,826.00		
F6450-300SHP	9712	5088	18”	450	285					$44,188.00	$46,128.00
F6500-300SHP	10658	5775	20”	500	150					$57,168.00	$59,108.00

Please add desired voltage to model number. Ex: F6300-300SHP+SY5-120MFT. Note: Specify configuration.
Standard delivery may vary, please consult your customer service representative for the latest lead time(s).

K20945 - 04/09 - Subject to change. © Belimo Aircontrols (USA), Inc.

Valve Specifications

Service	chilled, hot water, 60% glycol, steam to 50 psi		
Flow characteristic	modified equal percentage (F6…300SHP), unidirectional		
Recommended install	SUS (seat up stream)		
Action	quarter turn, mechanically limited		
Sizes	2”, 2½”, 3”, 4”, 5”, 6”, 8”, 10”, 12”, 14”, 16”, 18”, 20”, 24”		
Materials:			
Body	Carbon steel full lug	Shaft	17 - 4 PH stainless
Disc	316 stainless steel	Gland Seal	TFE
Seats	RTFE	Bushings	glass backed PTFE
Type of end fitting	ANSI Class 250/300 flanged		
Body pressure	ANSI Class 300 rated		
Flange	for use with ANSI Class 250/300 flanges		
Media temperature range	ANSI Class 300 limitations		
Operating ambient temperature range	-22°F to +150°F [-30°C to +65°C]		
Close-off pressure	725 psi @ 100°F		
Rangeability	10:1 (for 30°F to 70°F)		
Maximum velocity	32 FPS		
Body pressure rating	ANSI Class 300 limitations		

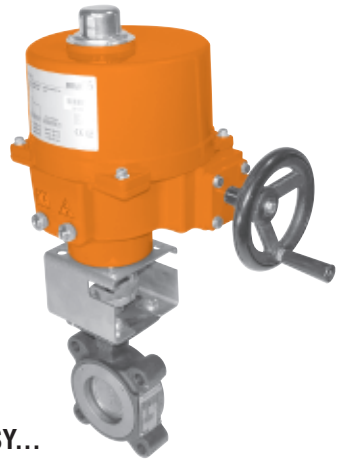

F6 SY…

2 YEAR WARRANTY

F6…300SHP 2-way Butterfly Valve with NEMA 4X Industrial Style Actuator

ACTUATOR PART #						SY9-110, SY9-220	SY9-120MFT, SY9-230MFT	SY10-110, SY10-220	SY10-120MFT, SY10-230MFT	SY11-110, SY11-220	SY11-120MFT, SY11-230MFT
Control type						On/Off, Floating Pt.	Proportional/MFT	On/Off, Floating Pt.	Proportional/MFT	On/Off, Floating Pt.	Proportional/MFT
Manual override						•	•	•	•	•	•
Running time						58 seconds	58 seconds	58 seconds	58 seconds	58 seconds	58 seconds
ELECTRICAL CONNECTION:											
Two (2) ½” conduit fittings						•	•	•	•	•	•
Covered terminal strip						•	•	•	•	•	•
Butterfly Valve Model #	**C_V 90°**	**C_V 60°**	**Valve Nominal Size Inches**	**DN/mm**	**Close-off psi**						
F6400-300SHP	8243	3988	16”	400	400	$36,122.00	$38,058.00				
F6400-300SHP	8243	3988	16”	400	600			$36,434.00	$38,058.00		
F6450-300SHP	9712	5088	18”	450	400	$45,434.00	$47,372.00				
F6450-300SHP	9712	5088	18”	450	600					$47,928.00	$49,866.00
F6500-300SHP	10658	5775	20”	500	285			$58,722.00	$60,664.00		
F6500-300SHP	10658	5775	20”	500	400					$60,910.00	$62,850.00
F6600-300SHP	16205	8855	24”	600	150			$73,048.00	$74,986.00		

Please add desired voltage to model number. Ex: F6500-300SHP+SY10-110. Note: Specify configuration.

SY MULTI-FUNCTION TECHNOLOGY

Description	P-CODE	Control Input	Built-in Feedback	Loss of Signal	Running Time	List Price
MFT	ACE	2-10V	2-10V	stop	actuator(s) constant	No Charge
MFT	ACF	0.5-10V	0.5-10V	stop	actuator(s) constant	No Charge
MFT	ACG	4-20mA	4-20mA	stop	actuator(s) constant	No Charge
MFT	ACH	4-20mA	2-10V	stop	actuator(s) constant	No Charge
MFT	ACJ	2-10V	2-10V	open	actuator(s) constant	No Charge
MFT	ACK	0.5-10V	0.5-10V	open	actuator(s) constant	No Charge
MFT	ACL	4-20mA	4-20mA	open	actuator(s) constant	No Charge
MFT	ACM	4-20mA	2-10V	open	actuator(s) constant	No Charge
MFT	ACN	2-10V	2-10V	close	actuator(s) constant	No Charge
MFT	ACP	0.5-10V	0.5-10V	close	actuator(s) constant	No Charge
MFT	ACR	4-20mA	4-20mA	close	actuator(s) constant	No Charge
MFT	ACS	4-20mA	2-10V	close	actuator(s) constant	No Charge

Most popular configurations are available at no additional cost. All other configurations carry a $34.00 list price.
Standard delivery may vary, please consult your customer service representative for the latest lead time(s).

K20945 - 04/09 - Subject to change. © Belimo Aircontrols (USA), Inc.

F7 ANSI 300 Class, Non-Spring Return Actuator

Reinforced Teflon® Seat, 316 Stainless Disc with NEMA 4X Industrial Style Actuator

Valve Specifications

Service	chilled, hot water, 60% glycol, steam to 50 psi		
Flow characteristic	modified linear (F7…300SHP), unidirectional		
Action	quarter turn, mechanically limited		
Sizes	2”, 2½”, 3”, 4”, 5”, 6”, 8”, 10”, 12”, 14”, 16”, 18”, 20”, 24”		
Materials:			
Body	Carbon steel full lug	Shaft	17-4 PH stainless
Disc	316 stainless steel	Gland Seal	TFE
Seats	RTFE	Bushings	glass backed PTFE
Type of end fitting	ANSI Class 250/300 flanged		
Body pressure	ANSI Class 300 rated		
Flange	for use with ANSI Class 250/300 flanges		
Media temperature range	ANSI Class 300 limitations		
Operating ambient temperature range	-22°F to +150° F [-30°C to +65°C]		
Close-off pressure	725 psi @ 100°F		
Rangeability	10:1 (for 30° to 70° range)		
Maximum velocity	32 FPS		
Body pressure rating	ANSI Class 300 limitations		

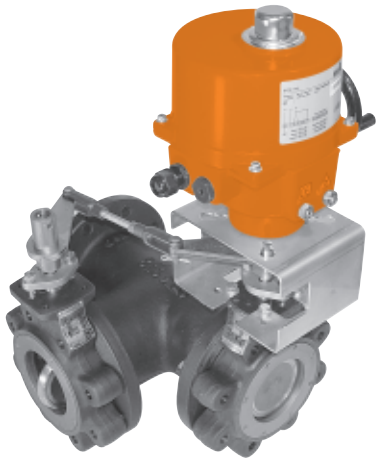

F7 SY...

2 YEAR WARRANTY

F7…300SHP 3-way Butterfly Valve with NEMA 4X Industrial Style Actuator

ACTUATOR PART #						SY2-24, SY2-110, SY2-220	SY2-24MFT, SY2-120MFT, SY2-230MFT	SY3-24, SY3-110, SY3-220	SY3-24MFT, SY3-120MFT, SY3-230MFT	SY4-24, SY4-110, SY4-220	SY4-24MFT, SY4-120MFT, SY4-230MFT
Control type						On/Off, Floating Pt.	Proportional/MFT	On/Off, Floating Pt.	Proportional/MFT	On/Off, Floating Pt.	Proportional/MFT
Manual override						•	•	•	•	•	•
Running time						15 seconds	15 seconds	22 seconds	22 seconds	16 seconds	16 seconds
ELECTRICAL CONNECTION:											
Two (2) ½” conduit fittings						•	•	•	•	•	•
Covered terminal strip						•	•	•	•	•	•
Butterfly Valve Model #	**C_V 90°**	**C_V 60°**	**Valve Nominal Size Inches**	**DN/mm**	**Close-off psi**						
F750-300SHP	100	52	2”	50	400	$9,500.00	$11,214.00				
F750-300SHP	100	52	2”	50	600			$9,726.00	$11,456.00		
F765-300SHP	143	75	2½”	65	400	$13,630.00	$15,306.00				
F765-300SHP	143	75	2½”	65	600			$13,858.00	$15,586.00		
F780-300SHP	223	117	3”	80	400	$10,850.00	$12,566.00				
F780-300SHP	223	117	3”	80	600			$11,074.00	$12,804.00		
F7100-300SHP	435	228	4”	100	285	$12,936.00	$14,662.00				
F7100-300SHP	435	228	4”	100	600			$13,172.00	$14,902.00		
F7125-300SHP	688	361	5”	125	285			$21,092.00	$22,822.00		
F7125-300SHP	688	361	5”	125	600					$21,588.00	$23,580.00
F7150-300SHP	1041	546	6”	150	285			$18,510.00	$20,240.00		
F7150-300SHP	1041	546	6”	150	600					$19,006.00	$20,996.00
F7200-300SHP	1911	1001	8”	200	400					$26,066.00	$28,058.00
F7250-300SHP	3194	1673	10”	250	150					$37,722.00	$39,714.00

Please add desired voltage to model number. Ex: F750-300SHP+SY2-24. Note: Specify configuration.

K20945 - 04/09 - Subject to change. © Belimo Aircontrols (USA), Inc.

Valve Specifications

Service	chilled, hot water, 60% glycol, steam to 50 psi		
Flow characteristic	modified linear (F7…300SHP), unidirectional		
Action	quarter turn, mechanically limited		
Sizes	2”, 2½”, 3”, 4”, 5”, 6”, 8”, 10”, 12”, 14”, 16”, 18”, 20”, 24”		
Materials:			
Body	Carbon steel full lug	Shaft	17-4 PH stainless
Disc	316 stainless steel	Gland Seal	TFE
Seats	RTFE	Bushings	glass backed PTFE
Type of end fitting	ANSI Class 250/300 flanged		
Body pressure	ANSI Class 300 rated		
Flange	for use with ANSI Class 250/300 flanges		
Media temperature range	ANSI Class 300 limitations		
Operating ambient temperature range	-22°F to +150° F [-30°C to +65°C]		
Close-off pressure	725 psi @ 100°F		
Rangeability	10:1 (for 30° to 70° range)		
Maximum velocity	32 FPS		
Body pressure rating	ANSI Class 300 limitations		

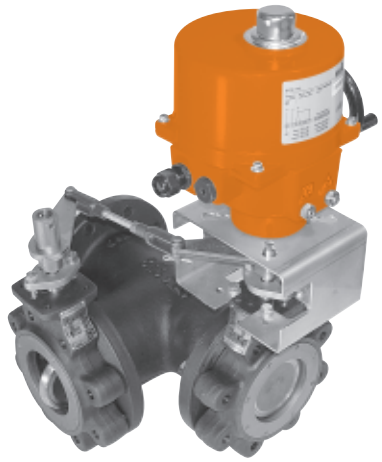

F7 SY...

2 YEAR WARRANTY

F7…300SHP 3-way Butterfly Valve with NEMA 4X Industrial Style Actuator

ACTUATOR PART #						SY5-24, SY5-110, SY5-220	SY5-24MFT, SY5-120MFT, SY5-230MFT	SY7-110, SY7-220	SY7-120MFT, SY7-230MFT	SY8-110, SY8-220	SY8-120MFT, SY8-230MFT
Control type						On/Off, Floating Pt.	Proportional/MFT	On/Off, Floating Pt.	Proportional/MFT	On/Off, Floating Pt.	Proportional/MFT
Manual override						•	•	•	•	•	•
Running time						22 seconds	22 seconds	46 seconds	46 seconds	46 seconds	46 seconds
ELECTRICAL CONNECTION:											
Two (2) ½” conduit fittings						•	•	•	•	•	
Covered terminal strip						•	•	•	•	•	
Butterfly Valve Model #	**C_V 90°**	**C_V 60°**	**Valve Nominal Size Inches**	**DN/mm**	**Close-off psi**						
F7200-300SHP	1911	1001	8”	200	600	$26,408.00	$28,398.00				
F7250-300SHP	3194	1673	10”	250	285	$38,066.00	$40,056.00				
F7250-300SHP	3194	1673	10”	250	600			$39,216.00	$41,156.00		
F7300-300SHP	4428	2319	12”	300	150	$50,672.00	$55,428.00				
F7300-300SHP	4428	2319	12”	300	400			$51,824.00	$53,764.00		
F7300-300SHP	4428	2319	12”	300	600					$53,112.00	$55,062.00
F7350-300SHP	5702	2986	14”	350	150			$80,628.00	$82,570.00		
F7350-300SHP	5702	2986	14”	350	400					$81,932.00	$83,870.00
F7400-300SHP	8243	3988	16”	400	150			$89,976.00	$91,916.00		
F7450-300SHP	9712	5088	18”	450	150					$116,036.00	$117,974.00

Please add desired voltage to model number. Ex: F750-300SHP+SY2-24MFT. Note: Specify configuration.

K20945 - 04/09 - Subject to change. © Belimo Aircontrols (USA), Inc.

F7 ANSI 300 Class, Non-Spring Return Actuator

Reinforced Teflon® Seat, 316 Stainless Disc with NEMA 4X Industrial Style Actuator

Valve Specifications

Service	chilled, hot water, 60% glycol, steam to 50 psi		
Flow characteristic	modified linear (F7…300SHP), unidirectional		
Action	quarter turn, mechanically limited		
Sizes	2”, 2½”, 3”, 4”, 5”, 6”, 8”, 10”, 12”, 14”, 16”, 18”, 20”, 24”		
Materials:			
Body	Carbon steel full lug	Shaft	17-4 PH stainless
Disc	316 stainless steel	Gland Seal	TFE
Seats	RTFE	Bushings	glass backed PTFE
Type of end fitting	ANSI Class 250/300 flanged		
Body pressure	ANSI Class 300 rated		
Flange	for use with ANSI Class 250/300 flanges		
Media temperature range	ANSI Class 300 limitations		
Operating ambient temperature range	-22°F to +150° F [-30°C to +65°C]		
Close-off pressure	725 psi @ 100°F		
Rangeability	10:1 (for 30° to 70° range)		
Maximum velocity	32 FPS		
Body pressure rating	ANSI Class 300 limitations		

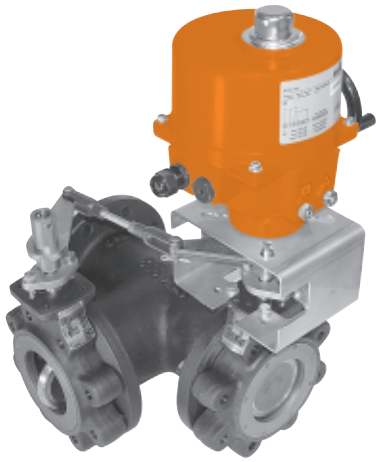

F7 SY…

2 YEAR WARRANTY

F7…300SHP 3-way Butterfly Valve with NEMA 4X Industrial Style Actuator

ACTUATOR PART #						SY9-110, SY9-220	SY9-120MFT, SY9-230MFT	SY10-110, SY10-220	SY10-120MFT, SY10-230MFT
Control type						On/Off, Floating Pt.	Proportional/MFT	On/Off, Floating Pt.	Proportional/MFT
Manual override						•	•	•	•
Running time						58 seconds	58 seconds	58 seconds	58 seconds
ELECTRICAL CONNECTION:									
Two (2) ½” conduit fittings						•	•	•	•
Covered terminal strip						•	•	•	•
Butterfly Valve Model #	**C_V 90°**	**C_V 60°**	**Valve Nominal Size Inches**	**DN/mm**	**Close-off psi**				
F7350-300SHP	5702	2986	14”	350	600			$83,486.00	$85,424.00
F7400-300SHP	8243	3988	16”	400	285	$92,522.00	$94,458.00		
F7400-300SHP	8243	3988	16”	400	400			$92,832.00	$94,770.00
F7450-300SHP	9712	5088	18”	450	285			$117,590.00	$122,450.00
F7500-300SHP	10658	5775	20”	500	150	$154,896.00	$156,834.00		

Please add desired voltage to model number. Ex: F750-300SHP+SY2-24. Note: Specify configuration.

K20945 - 04/09 - Subject to change. © Belimo Aircontrols (USA), Inc.

Valve Specifications

Service	chilled, hot water, 60% glycol, steam to 50 psi		
Flow characteristic	modified linear (F7…300SHP), unidirectional		
Action	quarter turn, mechanically limited		
Sizes	2”, 2½”, 3”, 4”, 5”, 6”, 8”, 10”, 12”, 14”, 16”, 18”, 20”, 24”		
Materials:			
Body	Carbon steel full lug	Shaft	17-4 PH stainless
Disc	316 stainless steel	Gland Seal	TFE
Seats	RTFE	Bushings	glass backed PTFE
Type of end fitting	ANSI Class 250/300 flanged		
Body pressure	ANSI Class 300 rated		
Flange	For use with ANSI Class 250/300 flanges		
Media temperature range	ANSI Class 300 limitations		
Operating ambient temperature range	-22°F to +150° F [-30°C to +65°C]		
Close-off pressure	725 psi @ 100°F		
Rangeability	10:1 (for 30° to 70° range)		
Maximum velocity	32 FPS		
Body pressure rating	ANSI Class 300 limitations		

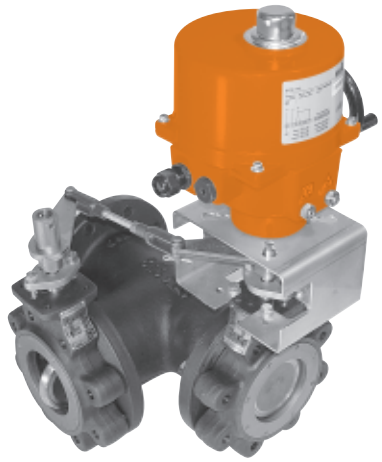

F7 SY...

2 YEAR WARRANTY

F7…300SHP 3-way Butterfly Valve with NEMA 4X Industrial Style Actuator

ACTUATOR PART #						SY11-110, SY11-220	SY11-120MFT, SY11-230MFT	SY12-110, SY12-220	SY12-120MFT, SY12-230MFT
Control type						On/Off, Floating Pt.	Proportional/MFT	On/Off, Floating Pt.	Proportional/MFT
Manual override						•	•	•	•
Running time						58 seconds	58 seconds	58 seconds	58 seconds
ELECTRICAL CONNECTION:									
Two (2) ½” conduit fittings						•	•	•	•
Covered terminal strip						•	•	•	•
Butterfly Valve Model #	**C_V 90°**	**C_V 60°**	**Valve Nominal Size Inches**	**DN/mm**	**Close-off psi**				
F7400-300SHP	8243	3988	16”	400	600			$95,640.00	$97,576.00
F7450-300SHP	9712	5088	18”	450	400	$119,776.00	$121,716.00		
F7500-300SHP	10658	5775	20”	500	285			$158,014.00	$159,954.00
F7600-300SHP	16205	8855	24”	600	150			$208,756.00	$210,696.00

Please add desired voltage to model number. Ex: F750-300SHP+SY2-24MFT. Note: Specify configuration.

SY MULTI-FUNCTION TECHNOLOGY

Description	P-CODE	Control Input	Built-in Feedback	Loss of Signal	Running Time	List Price
MFT	ACE	2-10V	2-10V	stop	actuator(s) constant	No Charge
MFT	ACF	0.5-10V	0.5-10V	stop	actuator(s) constant	No Charge
MFT	ACG	4-20mA	4…20mA	stop	actuator(s) constant	No Charge
MFT	ACH	4-20mA	2-10V	stop	actuator(s) constant	No Charge
MFT	ACJ	2-10V	2-10V	open	actuator(s) constant	No Charge
MFT	ACK	0.5-10V	0.5-10V	open	actuator(s) constant	No Charge
MFT	ACL	4-20mA	4…20mA	open	actuator(s) constant	No Charge
MFT	ACM	4-20mA	2-10V	open	actuator(s) constant	No Charge
MFT	ACN	2-10V	2-10V	close	actuator(s) constant	No Charge
MFT	ACP	0.5-10V	0.5-10V	close	actuator(s) constant	No Charge
MFT	ACR	4-20mA	4…20mA	close	actuator(s) constant	No Charge
MFT	ACS	4-20mA	2-10V	close	actuator(s) constant	No Charge

Most popular configurations are available at no additional cost. All other configurations carry a $34.00 list price.
Standard delivery may vary, please consult your customer service representative for the latest lead time(s).

K20945 - 04/09 - Subject to change. © Belimo Aircontrols (USA), Inc.

		NON-SPRING RETURN ACTUATORS			SPRING RETURN ACTUATORS	
WEATHERSHIELDS		**AM**	**GM**	**SY**	**AF**	**LIST PRICE**
	ZS-BFV-10 AM Series for F6, F7 HS(U)	•				$262.00
	ZS-BFV-20 GM Series for F6, F7 HS(U)		•			$262.00
	ZS-BFV-30 AF Series for F6, F7 HS(U)				•	$262.00
	ZS-BFV-60 Dual GM Series for F6 HS(U) (4” - 6”)		•			$464.00
	ZS-BFV-70 Dual AF Series for F6 HS(U) (2.5” - 3”)				•	$464.00
	ZS-BFV-80 Dual AF Series for F6 HS(U) (4”, 5”)				•	$464.00
	ZS-BFV-90 Dual AF/GM Series for F7 HS(U) below 4” (specify Valve size)		•		•	$464.00
	ZS-BFV-100 Dual GM Series for F7 HS(U) (4” - 6”)		•			$464.00
ELECTRIC DISCONNECT						
	SY-HOA-110 Local Electric Disconnect SY2-SY12 110V - 2 Position			•		$548.00
	SY-HOA-110P Local Electric Disconnect SY2-SY12 110V - Proportional			•		$548.00
	SY-HOA-24 Local Electric Disconnect SY2-SY12 24V - 2 Position			•		$548.00
	SY-HOA-24P Local Electric Disconnect SY2-SY12 - 24 Proportional			•		$548.00
AUXILIARY SWITCHES & POTENTIOMETERS						
	SY-1000-FB01 1000 Ω Feedback Potentiometer 2 Position, Factory Installed Option Only			•		$236.00
	SY-1000-FB02 1000 Ω Feedback Potentiometer Proportional, Factory Installed Option Only (Proportional Models SYx...-P, SR or MFT)			•		$236.00
PROGRAMMING TOOLS						
	MFT-P US Belimo MFT Configuration Software (V3.X) Includes: PC Tool software and MFT-LBL Kit US (interface cables [ZIP-RS232 US and ZIP-USB-MP] not included)	•	•	•	•	$140.00
INTERFACES, CABLES						
	ZIP-USB-MP US PC-Interface: Compact Unit for use with USB port and “ZK” Style Cable Adapter (ZK Cable Below Purchased Separately)	•	•	•	•	$490.00
	ZK1-GEN Cable for Use with ZIP-USB-MP US to Connect to New Generation Non-Spring Return Actuator via Diagnostic/ Programming Socket	•	•			$72.00
	ZK2-GEN Cable for Use with ZIP-USB-MP US to Connect with Spring and Non-Spring Return Actuators Not Equipped with Diagnostic/ Programming Socket	•	•	•		$42.00

K20945 - 04/09 - Subject to change. © Belimo Aircontrols (USA), Inc.

INTERFACES, CABLES		NON-SPRING RETURN ACTUATORS			SPRING RETURN ACTUATORS	
		AM	GM	SY	AF	LIST PRICE
	ZK3-GEN Cable to Connect ZIP-RS232 US and MFT-H SET US to New Generation Non-Spring Return Actuator via Diagnostic/ Programming Socket	•	•			$110.00
	ZK6-GEN Cable for Use with ZIP-USB-MP US to Connect to SY Actuator via RJII Port			•		$44.00

BATTERY BACKUP		NON-SPRING RETURN ACTUATORS			SPRING RETURN ACTUATORS	
		AM	GM	SY	AF	LIST PRICE
	NSV-SY-01 Battery Backup System for SY1-SY6 2 Position - 110 VAC			•		$3,718.00
	NSV-SY-02 Battery Backup System for SY1-SY6 Proportional - 110 VAC			•		$3,886.00
	NSV-SY-03 Battery Backup System for SY-7 2 Position - 110 VAC			•		$3,986.00
	NSV-SY-04 Battery Backup System for SY-7 Proportional - 110 VAC			•		$4,158.00
	NSV-SY-05 Battery Backup System for SY8-SY12 2 Position - 110 VAC			•		$6,304.00
	NSV-SY-06 Battery Backup System for SY8-SY12 Proportional - 110 VAC			•		$6,476.00
	NSV-SY-11 Battery Backup System for SY1-SY5 2 Position - 24 VAC			•		$4,338.00
	NSV-SY-12 Battery Backup System for SY1-SY5 Proportional - 24 VAC			•		$4,452.00
	NSV-SY-21 Battery Backup System for SY1-SY6 2 Position - 220 VAC			•		$4,282.00
	NSV-SY-22 Battery Backup System for SY1-SY6 Proportional - 220 VAC			•		$4,394.00
	NSV-SY-23 Battery Backup System for SY7-SY9 2 Position - 220 VAC			•		$4,462.00
	NSV-SY-24 Battery Backup System for SY7-SY9 Proportional - 220 VAC			•		$4,570.00
	NSV-SY-25 Battery Backup System for SY10-SY12 2 Position - 220 VAC			•		$7,432.00
	NSV-SY-26 Battery Backup System for SY10-SY12 Proportional - 220 VAC			•		$7,546.00
HANDWHEELS						
	ZG-SY23 SY2-SY3 Handwheel (replacement only)			•		$42.00
	ZG-SY46 SY4-SY6 Handwheel (replacement only)			•		$58.00
	ZG-SY78 SY7-SY8 Handwheel (replacement only)			•		$186.00
	ZG-SY912 SY9-SY12 Handwheel (replacement only)			•		$204.00

K20945 - 04/09 - Subject to change. © Belimo Aircontrols (USA), Inc.

MANUAL HANDLES	VALVE HS	LIST PRICE
F650HS+HND01 2" HS Series Valve with Manual Handle Cast Iron, 200 psi close-off, C_V 115	•	$206.00
F665HS+HND01 2.5" HS Series Valve with Manual Handle Cast Iron, 200 psi close-off, C_V 196	•	$220.00
F680HS+HND01 3" HS Series Valve with Manual Handle Cast Iron, 200 psi close-off, C_V 302	•	$242.00
F6100HS+HND01 4" HS Series Valve with Manual Handle Cast Iron, 200 psi close-off, C_V 600	•	$320.00
F6125HS+HND02 5" HS Series Valve with Manual Handle Cast Iron, 200 psi close-off, C_V 1022	•	$462.00
F6150HS+HND02 6" HS Series Valve with Manual Handle Cast Iron, 200 psi close-off, C_V 1579	•	$540.00
F6200HS+HND03 8" HS Series Valve with Manual Handle Cast Iron, 200 psi close-off, C_V 3136	•	$798.00
GEAR OPERATORS		
F650HS+GW01 2" HS Series Valve with Manual Gear Operator Cast Iron, 200 psi close-off, C_V 115	•	$320.00
F665HS+GW01 2.5" HS Series Valve with Manual Gear Operator Cast Iron, 200 psi close-off, C_V 196	•	$420.00
F680HS+GW01 3" HS Series Valve with Manual Gear Operator Cast Iron, 200 psi close-off, C_V 302	•	$460.00
F6100HS+GW02 4" HS Series Valve with Manual Gear Operator Cast Iron, 200 psi close-off, C_V 600	•	$532.00
F6125HS+GW02 5" HS Series Valve with Manual Gear Operator Cast Iron, 200 psi close-off, C_V 1022	•	$630.00
F6150HS+GW02 6" HS Series Valve with Manual Gear Operator Cast Iron, 200 psi close-off, C_V 1579	•	$676.00
F6200HS+GW03 8" HS Series Valve with Manual Gear Operator Cast Iron, 200 psi close-off, C_V 3136	•	$1,008.00
F6250HS+GW04 10" HS Series Valve with Manual Gear Operator Cast Iron, 200 psi close-off, C_V 5340	•	$1,340.00
F6300HS+GW05 12" HS Series Valve with Manual Gear Operator Cast Iron, 200 psi close-off,C_V 8250	•	$1,920.00
F6400HS+GW06 16" HS Series Valve with Manual Gear Operator Cast Iron, 200 psi close-off, C_V 16388	•	$2,482.00
F6450HS+GW06 18" HS Series Valve with Manual Gear Operator Cast Iron, 200 psi close-off, C_V 21705	•	$4,230.00
F6500HS+GW06 20" HS Series Valve with Manual Gear Operator Cast Iron, 200 psi close-off, C_V 27908	•	$5,096.00
F6500HS+GW07 24" HS Series Valve with Manual Gear Operator Cast Iron, 200 psi close-off, C_V 43116	•	$7,320.00
F6750HS+GW08 30" HS Series Valve with Manual Gear Operator Cast Iron, 200 psi close-off, C_V 73426	•	$12,310.00
F6750SHP+GW08 30" SHP Series Valve with Manual Gear Operator Cast Steel, 200 psi close-off, C_V 34388	•	$23,500.00

K20945 - 04/09 - Subject to change. © Belimo Aircontrols (USA), Inc.

MANUAL HANDLES		VALVE 150SHP	LIST PRICE
	F650-150SHP+HND05 2" SHP Series Valve with Manual Handle Cast Steel, ANSI 150 close-off limitations, C_V 102	•	$2,650.00
	F665-150SHP+HND05 2.5" SHP Series Valve with Manual Handle Cast Steel, ANSI 150 close-off limitations, C_V 146	•	$2,690.00
	F680-150SHP+HND06 3" SHP Series Valve with Manual Handle Cast Steel, ANSI 150 close-off limitations, C_V 228	•	$2,748.00
	F6100-150SHP+HND06 4" SHP Series Valve with Manual Handle Cast Steel, ANSI 150 close-off limitations, C_V 451	•	$2,928.00
	F6125-150SHP+HND07 5" SHP Series Valve with Manual Handle Cast Steel, ANSI 150 close-off limitations, C_V 714	•	$4,700.00
	F6150-150SHP+HND07 6" SHP Series Valve with Manual Handle Cast Steel, ANSI 150 close-off limitations, C_V 1103	•	$4,294.00
	F6200-150SHP+HND08 8" SHP Series Valve with Manual Handle Cast Steel, ANSI 150 close-off limitations, C_V 2064	•	$5,492.00
GEAR OPERATORS			
	F650-150SHP+GW10 2" SHP Series Valve with Manual Gear Operator Cast Steel, ANSI 150 close-off limitations, C_V 102	•	$3,600.00
	F665-150SHP+GW10 2.5" SHP Series Valve with Manual Gear Operator Cast Steel, ANSI 150 close-off limitations, C_V 146	•	$3,680.00
	F680-150SHP+GW11 3" SHP Series Valve with Manual Gear Operator Cast Steel, ANSI 150 close-off limitations, C_V 228	•	$3,736.00
	F6100-150SHP+GW11 4" SHP Series Valve with Manual Gear Operator Cast Steel, ANSI 150 close-off limitations, C_V 451	•	$3,850.00
	F6125-150SHP+GW12 5" SHP Series Valve with Manual Gear Operator Cast Steel, ANSI 150 close-off limitations, C_V 714	•	$5,300.00
	F6150-150SHP+GW12 6" SHP Series Valve with Manual Gear Operator Cast Steel, ANSI 150 close-off limitations, C_V 1103	•	$5,380.00
	F6200-150SHP+GW13 8" SHP Series Valve with Manual Gear Operator Cast Steel, ANSI 150 close-off limitations, C_V 2064	•	$6,364.00
	F6250-150SHP+GW15 10" SHP Series Valve with Manual Gear Operator Cast Steel, ANSI 150 close-off limitations, C_V 3517	•	$9,468.00
	F6300-150SHP+GW17 12" SHP Series Valve with Manual Gear Operator Cast Steel, ANSI 150 close-off limitations, C_V 4837	•	$12,470.00
	F6350-150SHP+GW19 14" SHP Series Valve with Manual Gear Operator Cast Steel, ANSI 150 close-off limitations, C_V 6857	•	$16,486.00
	F6400-150SHP+GW21 16" SHP Series Valve with Manual Gear Operator Cast Steel, ANSI 150 close-off limitations, C_V 9287	•	$23,398.00
	F6450-150SHP+GW23 18" SHP Series Valve with Manual Gear Operator Cast Steel, ANSI 150 close-off limitations, C_V 11500	•	$27,276.00
	F6500-150SHP+GW25 20" SHP Series Valve with Manual Gear Operator Cast Steel, ANSI 150 close-off limitations, C_V 14420	•	$36,600.00
	F6600-150SHP+GW27 24" SHP Series Valve with Manual Gear Operator Cast Steel, ANSI 150 close-off limitations, C_V 22050	•	$50,800.00
	F6750-150SHP+GW29 30" SHP Series Valve with Manual Gear Operator Cast Steel, ANSI 150 close-off limitations, C_V 34388	•	$91,200.00

K20945 - 04/09 - Subject to change. © Belimo Aircontrols (USA), Inc.

MANUAL HANDLES	VALVE 300SHP	LIST PRICE
F650-300SHP+HND05 2" SHP Series Valve with Manual Handle Cast Steel, ANSI 300 close-off limitations, C_V 100	•	$3,084.00
F665-300SHP+HND05 2.5" SHP Series Valve with Manual Handle Cast Steel, ANSI 300 close-off limitations, C_V 143	•	$3,104.00
F680-300SHP+HND06 3" SHP Series Valve with Manual Handle Cast Steel, ANSI 300 close-off limitations, C_V 223	•	$2,854.00
F6100-300SHP+HND06 4" SHP Series Valve with Manual Handle Cast Steel, ANSI 300 close-off limitations, C_V 435	•	$3,054.00
F6125-300SHP+HND07 5" SHP Series Valve with Manual Handle Cast Steel, ANSI 300 close-off limitations, C_V 688	•	$5,334.00
F6150-300SHP+HND08 6" SHP Series Valve with Manual Handle Cast Steel, ANSI 300 close-off limitations, C_V 1041	•	$4,316.00
GEAR OPERATORS		
F650-300SHP+GW10 2" SHP Series Valve with Manual Gear Operator Cast Steel, ANSI 300 close-off limitations, C_V 100	•	$3,798.00
F665-300SHP+GW10 2.5" SHP Series Valve with Manual Gear Operator Cast Steel, ANSI 300 close-off limitations, C_V 143	•	$3,818.00
F680-300SHP+GW11 3" SHP Series Valve with Manual Gear Operator Cast Steel, ANSI 300 close-off limitations, C_V 223	•	$3,568.00
F6100-300SHP+GW11 4" SHP Series Valve with Manual Gear Operator Cast Steel, ANSI 300 close-off limitations, C_V 435	•	$3,762.00
F6125-300SHP+GW12 5" SHP Series Valve with Manual Gear Operator Cast Steel, ANSI 300 close-off limitations, C_V 688	•	$6,030.00
F6150-300SHP+GW13 6" SHP Series Valve with Manual Gear Operator Cast Steel, ANSI 300 close-off limitations, C_V 1041	•	$5,012.00
F6200-300SHP+GW14 8" SHP Series Valve with Manual Gear Operator Cast Steel, ANSI 300 close-off limitations, C_V 1911	•	$6,674.00
F6250-300SHP+GW16 10" SHP Series Valve with Manual Gear Operator Cast Steel, ANSI 300 close-off limitations, C_V 3194	•	$11,068.00
F6300-300SHP+GW18 12" SHP Series Valve with Manual Gear Operator Cast Steel, ANSI 300 close-off limitations, C_V 4428	•	$14,616.00
F6350-300SHP+GW20 14" SHP Series Valve with Manual Gear Operator Cast Steel, ANSI 300 close-off limitations, C_V 5702	•	$25,828.00
F6400-300SHP+GW22 16" SHP Series Valve with Manual Gear Operator Cast Steel, ANSI 300 close-off limitations, C_V 8243	•	$30,524.00
F6450-300SHP+GW24 18" SHP Series Valve with Manual Gear Operator Cast Steel, ANSI 300 close-off limitations, C_V 9712	•	$38,850.00
F6500-300SHP+GW26 20" SHP Series Valve with Manual Gear Operator Cast Steel, ANSI 300 close-off limitations, Cv 10658	•	$49,626.00
F6600-300SHP+GW28 24" SHP Series Valve with Manual Gear Operator Cast Steel, ANSI 300 close-off limitations, C_V 16205	•	$72,842.00

K20945 - 04/09 - Subject to change. © Belimo Aircontrols (USA), Inc.