Selection Guide

TAC™ VB-7000 Series 1/2" to 2" Globe Valves with Forta™ M400A, M800A, and M1500A Actuators

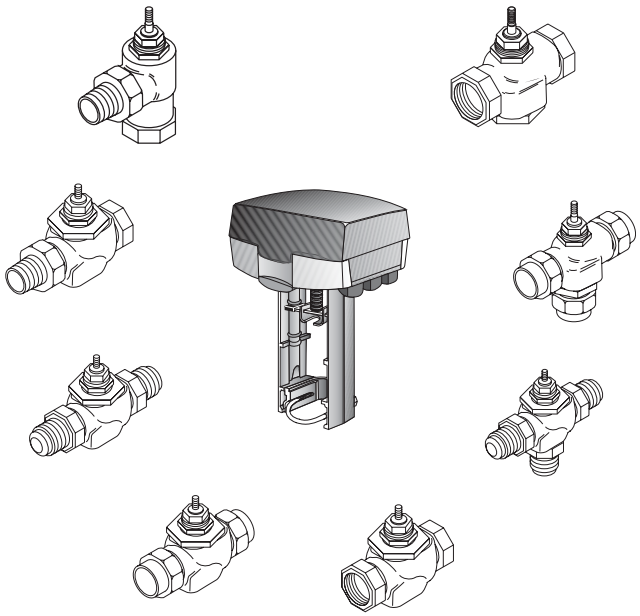

Applications

TAC Forta M400A, M800A, and M1500A series linear actuators mount directly[1] onto 1/2" to 2" VB-7xxx series two-way and three-way globe valve bodies. Applications include chilled or hot water and steam. Field selectable input signals include reverse and direct acting, floating or proportional 0-10 Vdc, 2-10 Vdc, or 4-20 mAdc, and proportional sequencing input signal ranges[2].

Applicable Literature

- TAC Forta M400A and M800A Installation Instructions, DIM119E (F-27506)
- TAC Forta M1500A Installation Instructions, DIM121E (F-27507)
- AV-811 Installation Instructions, F-27442
- TAC Valves catalog, F-27414
- CA-28 Control Valve Sizing, F-13755

Selection Guide Contents

Applications ..... page 1
Valve and Actuator Selection Procedure ..... page 2
TAC VB-72xx Series Two-Way Valve Bodies..... page 3
TAC VB-73xx Series Three-Way Valve Bodies..... page 4
TAC Forta Actuator Model Chart ..... page 5
Ambient Temperature Restrictions ..... page 5
Valve/Actuator Close-off Pressures..... page 5
Factory Valve and Actuator Assemblies ..... page 6
Forta Actuator Dimensions ..... page 7
Two-Way Valve/Actuator Assembly Dimensions..... page 8
Three-Way Valve/Actuator Assembly Dimensions ..... page 9

1. AV-811 linkage adapter kit required (order separately).
2. 0-5 Vdc, 5-10 Vdc, 2-6 Vdc, and 6-10 Vdc

© Copyright 2008 TAC. All rights reserved.

Valve and Actuator Selection Procedure

1. **Determine the required flow coefficient (Cv/kvs).**
   Using the required flow and pressure drop for the application (consult CA28, F-13755 if necessary), determine the required flow coefficient.
2. **Determine valve body part number.**
   Select a two-way valve body from Table-1 or a three-way mixing or diverting valve body from Table-2 having the required flow coefficient, size, body pattern, end connection, and temperature/pressure ratings appropriate for the application.
3. **Select the Forta Actuator**

   Using the required close-off pressure for the application, consult Table-5 and select a Forta actuator having sufficient close-off pressure on the valve body selected in Step 2. Additional Forta actuator specifications may be found in Table-3 or in the Forta Installation Instructions sheets shown in *Applicable Literature.*
4. **Determine Assembly Part Number**

   If a complete valve and actuator assembly is required, consult Table-3 for the actuator code of the Forta actuator selected in Step 3. For the complete assembly part number:

   - Change the valve body part number prefix from VB to VU.
   - Insert the actuator code in the third field of the part number.
   - Confirm the availability of the factory assembly by consulting Table-6 (two-way valves), Table-7 (three-way mixing valves), or Table-8 (three-way diverting valves).

   Example:

   - Valve body: VB-7213-0-4-4
   - Actuator: M400A (actuator code 674 from Table-3)
   - Complete assembly: VU-7213-674-4-4

Forta actuators are field configured for the desired control signal type and range plus the desired action. Consult the appropriate Forta Installation Instructions for further information (see *Applicable Literature*).

© Copyright 2008 TAC. All rights reserved.

Valve Body and Actuator Selection

Table-1 TAC VB-72xx Series Two-Way Valve Bodies

Two-Way Valves

- Stem Up Open or Stem Up Closed
- 1/2” to 1/1/4” Union Angle and straightway
- 5/8” OD SAE Flared
- 1/2” to 2” Union Sweat
- 1/2” to 2” NPT or Rp Threaded

		Application: Chilled or Hot Water					Application: Hot Water or Steam	
		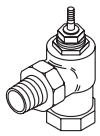	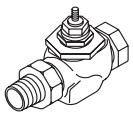	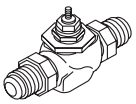	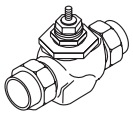	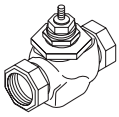	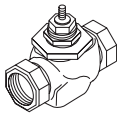	
		Union Angle	Union Straightway	SAE Flared	Union Sweat	NPT Threaded Rp Threaded	NPT Threaded	
Size		1/2” to 1-1/4”	1/2” to 1-1/4”	5/8” OD	1/2” to 2”	1/2” to 2” 15 to 50 mm	1/2” to 2”	
Valve Body Part Number, Stem Up Open		VB-7211-0-3-P	VB-7211-0-4-P	VB-7212-0-4-P	VB-7214-0-4-P	VB-7213-0-4-P VB-7215-0-4-P[a]	VB-7253-0-4-P	VB-7273-0-4-P
Valve Body Part Number, Stem Up Closed		—	VB-7221-0-4-P	VB-7222-0-4-P	VB-7224-0-4-P	VB-7223-0-4-P VB-7225-0-4-P[a]	VB-7263-0-4-P	VB-7283-0-4-P
Flow Type		Equal %					Modified Linear	
Material	**Body**	Bronze					Bronze	
	Seat	Bronze					Stainless Steel	
	Stem	Stainless Steel					Stainless Steel	
	Plug	Brass					Stainless Steel	
	Packing	Spring Loaded TFE/EPDM					Spring Loaded TFE	
	Disc	EPDM					Teflon	None
Pressure Class		ANSI 250 Up to 400°F (204°C) below 150°F (65°C) ISO PN16						
Maximum Inlet Pressure, Steam		35 PSIG (241 kPa)					100 PSIG (690 kPa)	150 PSIG (1034 kPa)
Allowable Control Media Temperature		20°F to 281 °F (-7°C to 138°C)					20 to 340°F (-7 to 171°C)	20 to 400°F (-7 to 205°C
Allowable Differential Pressure, Water[b]		35 PSI (241 kPa) for Normal Life					35 PSIG (241 kPa)	35 PSIG (241 kPa)
Allowable Differential Pressure, Steam[b]		20 PSI (138 kPa)					35 PSI (241 kPa)	50 PSI (345 kPa)
To Select a Port Code (P)								
P Code	**Valve Size**	**Cv (kvs) Rating**						
01	1/2” (15 mm)	0.4 (0.34)	0.4 (0.34)	0.4 (0.34)	0.4 (0.34)	0.4 (0.34)	0.4 (0.34)	0.4 (0.34)
02		1.3 (1.1)	1.3 (1.1)	1.3 (1.1)	1.3 (1.1)	1.3 (1.1)	1.3 (1.1)	1.3 (1.1)
03		2.2 (1.9)	2.2 (1.9)	2.2 (1.9)	2.2 (1.9)	2.2 (1.9)	2.2 (1.9)	2.2 (1.9)
04		5.0 (4.3)	4.4 (3.8)	4.4 (3.8)	4.4 (3.8)	4.4 (3.8)	4.4 (3.8)	4.4 (3.8)
05	3/4” (20 mm)	5.5 (4.7)	5.5 (4.7)	—	5.5 (4.7)	5.5 (4.7)	5.5 (4.7)	5.5 (4.7)
06		8.5 (7.4)	7.5 (6.5)	—	7.5 (6.5)	7.5 (6.5)	7.5 (6.5)	7.5 (6.5)
07	1” (25 mm)	14 (12)	10 (8.6)	—	10 (8.6)	10 (8.6)	10 (8.6)	10 (8.6)
08		16 (14)	14 (12)	—	14 (12)	14 (12)	14 (12)	14 (12)
09	1-1/4” (32 mm)	22 (19)	20 (17.3)	—	20 (17.3)	20 (17.3)	20 (17.3)	20 (17.3)
10	1-1/2” (40 mm)	—	—	—	28 (21.2)	28 (21.2)	28 (21.2)	28 (21.2)
11	2” (50 mm)	—	—	—	40 (34.6)	40 (34.6)	40 (34.6)	40 (34.6)

[a] 15 to 50 mm valves with metric thread Rp 1/2 to Rp 2

[b] Maximum recommended differential in full open position. Do not exceed recommended differential pressure (pressure drop) or integrity of parts may be affected.

© Copyright 2008 TAC. All rights reserved.

Table-2 TAC VB-73xx Series Three-Way Valve Bodies

Three-Way Valves

- Mixing or Diverting
- 5/8” OD SAE Flared
- 1/2” to 2” NPT or Rp Threaded
- 1/2” to 2” Union Sweat

		Application: Chilled or Hot Water			
		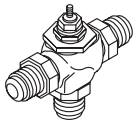	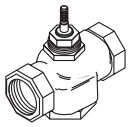	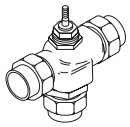	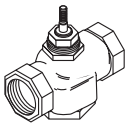
		SAE Flared	NPT Threaded Rp Threaded	Union Sweat	NPT Threaded
Size		5/8” OD	1/2” to 2” 15 to 50 mm	1/2” to 2”	1/2” to 2”
Valve Body Part Number, Mixing [a]		VB-7312-0-4-P	VB-7313-0-4-P VB-7315-0-4-P[b]	VB-7314-0-4-P	—
Valve Body, Part Number Diverting [c]		—	—	—	VB-7323-0-4-P
Flow Type		Equal %			
Material	**Body**	Bronze			
	Seat	Bronze			
	Stem	Stainless Steel			
	Plug	Brass			
	Packing	Spring Loaded TFE/EPDM			
	Disc	None			
Pressure Class		ANSI 250 Up to 400°F (204°C) below 150°F (65°C)			ISO PN16
Allowable Control Media Temperature		20°F to 281 °F (-7°C to 138°C)			
Allowable Differential Pressure, Water[d]		35 PSI (241 kPa) for Normal Life			
To Select a Port Code (P)					
P Code	**Valve Size**	**Cv (kvs) Rating**			
02	1/2” (15 mm)	2.2 (1.9)	2.2 (1.9)	2.2 (1.9)	—
04		4.4 (3.8)	4.4 (3.8)	4.4 (3.8)	4.4 (3.8)
06	1” (25 mm	—	7.5 (6.5)	7.5 (6.5)	7.5 (6.5)
08		—	14 (12)	14 (12)	15 (13)
09	1-1/4” (32 mm)	—	20 (17.3)	20 (17.3	20 (17.3)
10	1-1/2” (40 mm)	—	28 (21.2)	28 (21.2)	28 (21.2)
11	2” (50 mm)	—	41 (36)	40 (34.6)	40 (34.6)

[a] On VB-7313 and VB-7315 mixing valves, port AB is the common port (located on the side) and ports A and B are inlets. Flow is from B to AB when the valve stem is in up position (port A closed). Flow is from A to AB when valve stem is in down position (port B closed).

[b] 15 to 50 mm valves with metric thread Rp 1/2 to Rp 2

[c] On VB-7323 diverting valves, inlet port B is the common port (located on the bottom) and ports AB and B are outlets. When the valve stem is in the up position, flow is from B to AB (port A closed). When the valve stem is in the down position, flow is from port B to A (port AB closed).

[d] Maximum recommended differential in full open position. Do not exceed recommended differential pressure (pressure drop) or integrity of parts may be affected.

© Copyright 2008 TAC. All rights reserved.

Table-3 TAC Forta Actuator Model Chart

Model	Actuator Code	Force, lbf (N)	Power	Running VA	Transformer Sizing VA	Floating Control[a]	Proportional Control[a]	Feedback	(2) SPDT Auxiliary Switches
M400A [c]	674	90 (400)	24 Vac ±10% 50/60 Hz	6	30	Yes	0-10 Vdc, 2-10 Vdc, or 4-20 mAdc	2-10 Vdc	No
M400A-S2 [c]	— [b]								24 Vac 4A
M800A [c]	680	180 (800)		15	50				No
M800A-S2 [c]	— [b]								24 Vac 4A
M1500A [c]	686	337 (1500)		15	50				No
M1500A-S2 [c]	— [b]								24 Vac 4A

[a] DIP switch selectable.
[b] No actuator code. No factory assemblies offered.
[c] AV-811 linkage (order separately) required for mounting actuators to VB-7xxx globe valve bodies. Do not use M1500A on VB-7323 three-way valves.

Table-4 Restrictions on Ambient Temperature for Forta Valve Actuators

Fluid Temperature in Valve Body	Maximum Allowable Ambient Temperature[a]
Chilled Water	122°F (50°C)
281°F (138°C)	113°F (45°C)
300°F (149°C)	107°F (42°C)
340°F (171°C)	100°F (38°C)
366°F (186°C)	90°F (32°C)

[a] Minimum allowable ambient operating temperature 14°F (-10°C)

Note: When installing valve and actuator assemblies, observe the minimum and maximum fluid and ambient temperature limits shown in Table-1, Table-2, and Table-4.

Table-5 Select Valve/Actuator Combination Having Sufficient Close-off for Application

Valve Body			Close-off Ratings, psi (kPa)		
Two-Way Valves	P Code	Size	M400A [a]	M800A [a]	M1500A [a]
VB-7211-0-3-P VB-7211-0-4-P VB-7212-0-4-P VB-7213-0-4-P VB-7214-0-4-P VB-7215-0-4-P VB-7221-0-4-P VB-7222-0-4-P VB-7223-0-4-P VB-7224-0-4-P VB-7225-0-4-P VB-7253-0-4-P VB-7263-0-4-P VB-7273-0-4-P VB-7283-0-4-P	-1, -2, -3, -4	1/2” (15 mm)	250 (1712)	250 (1712)	—
	-5, -6	3/4” (20 mm)	198 (1356)	250 (1712)	—
	-7, -8	1” (25 mm)	92 (630)	207 1418)	—
	-9	1-1/4” (32 mm)	56 (384)	130 (890)	—
	-10	1-1/2” (40 mm)	37 (253)	88 (603)	177 (1212) [a]
	-11	2” (50 mm)	19 (130)	48 (329)	98 (671) [a]
Three-Way Valves	P Code	Size	M400A [a]	M800A [a]	M1500A [b]
VB-7312-0-4-P VB-7313-0-4-P VB-7314-0-4-P VB-7315-0-4-P	-2, -4	1/2” (15 mm)	250 (1712)	250 (1712)	—
	-6	3/4” (20 mm)	198 (1356)	250 (1712)	—
	-8	1” (25 mm)	92 (630)	207 1418)	—
	-9	1-1/4” (32 mm	56 (384)	130 (890)	—
	10	1-1/2” (40 mm)	37 (253)	88 (603)	—
	-11	2” (50 mm)	19 (130)	48 (329)	—
VB-7323-0-4-P	-4, -6, -8, -9, -10, -11	1/2” to 2”	250 (1712)		Do Not Use [b]

[a] AV-811 linkage (order separately) required for mounting VB-7xxx valve bodies.
[b] Do not use M1500A on VB-7323 three-way valves.

© Copyright 2008 TAC. All rights reserved.

Factory Assemblies

Table-6 Factory Valve and Actuator Assemblies — Two-Way Valves [a]

			Actuator Model (Actuator Code [b])		
Valve Assembly Part Number [b]	**P Code [b]**	**Size**	**M400A (674)**	**M800A (680)**	**M1500A (686)**
VU-7213-xxx-4-P VU-7253-xxx-4-P VU-7273-xxx-4-P	1, 2, 3, 4	1/2”	X	—	—
	5, 6	3/4”	X	X	—
	7, 8	1”	X	X	—
	9	1-1/4”	X	X	—
	10	1-1/2”	X	X	X
	11	2”	X	X	X

[a] See Table-5 for close-off pressures
[b] Insert Actuator Code in third field of assembly part number. Insert P Code in last field of assembly part number.

Table-7 Factory Valve and Actuator Assemblies — Three-Way Mixing Valves [a]

			Actuator Model (Actuator Code [b])	
Valve Assembly Part Number [b]	**P Code [b]**	**Size**	**M400A (674)**	**M800A (680)**
VU-7313-xxx-4-P	2, 4	1/2”	X	—
	6	3/4”	X	—
	8	1”	X	—
	9	1-1/4”	X	—
	10	1-1/2”	X	X
	11	2”	X	X

[a] See Table-5 for close-off pressures
[b] Insert Actuator Code in third field of assembly part number. Insert P Code in last field of assembly part number.

Table-8 Factory Valve and Actuator Assemblies — Diverting Valves [a]

			Actuator Model (Actuator Code [b])
Valve Assembly Part Number [b]	**P Code [b]**	**Size**	**M400A (674)**
VU-7323-xxx-4-P	4	1/2”	X
	6	3/4”	X
	8	1”	X
	9	1-1/4”	X
	10	1-1/2”	X
	11	2”	X

[a] See Table-5 for close-off pressures
[b] Insert Actuator Code in third field of assembly part number. Insert P Code in last field of assembly part number.

© Copyright 2008 TAC. All rights reserved.

Dimensions

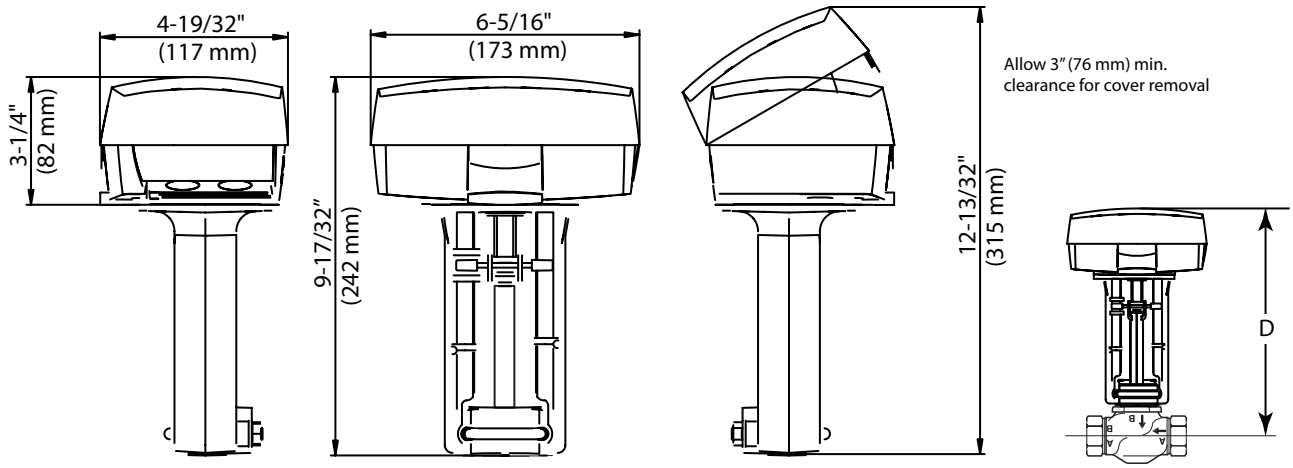

Figure-1 Forta Actuator Dimensions

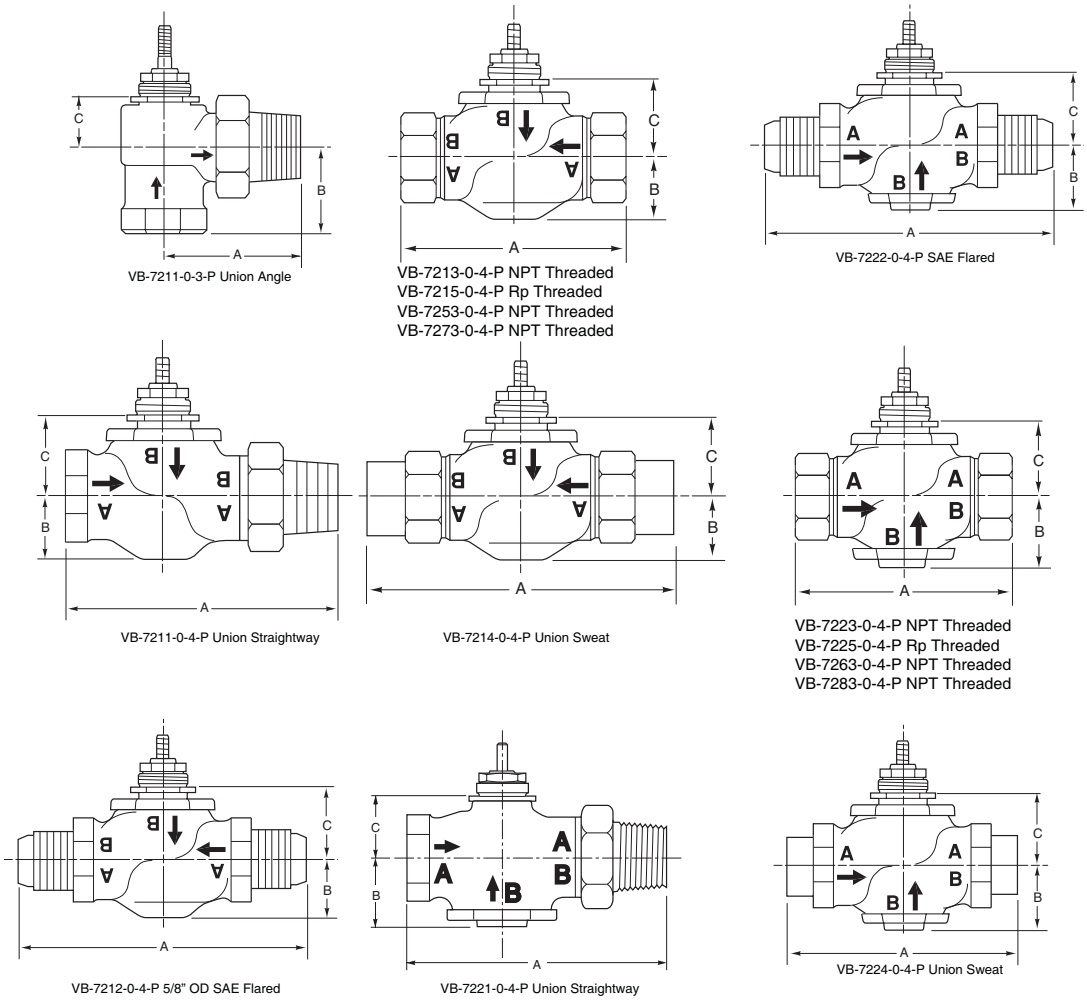

Figure-2 Two Way VB-7xxx Valve Body Dimensions

© Copyright 2008 TAC. All rights reserved.

Table-9 Dimensions — Two-Way Valves (see Figure-1 and Figure-2)

Valve Body Part Number	Size	Dimensions in Inches (mm)			
		A	B	C	D [a]
VB-7211-0-3-P	1/2“	3-1/8 (79)	1-5/8 (41)	3/4 (19)	10-9/32 (261)
	3/4 “	3-5/8 (92)	1-11/16 (43)	15/16 (24)	10-15/32 (266)
	1 “	4-1/16 (103)	1-15/16 (49)	1-1/4 (32)	10-25/32 (274)
	1-1/4 “	4-5/16 (110)	2-3/16 (56)	1-11/16 (43)	11-7/32 (285)
VB-7211-0-4-P	1/2 '	4-3/16 (106)	1-1/16 (27)	1-1/8 (29)	10-21/32 (271)
	3/4“	4-15/16 (125)	1-1/16 (27)	1-1/8 (29)	10-21/32 (271)
	1“	6 (152)	1-1/8 (29)	1-3/16 (30)	10-23/32 (272)
	1-1/4“	6-1/4 (159)	1-3/8 (35)	1-7/16 (37)	10-31/32 (279)
VB-7212-0-4-P	5/8“ O.D.	4 (102)	1-1/16 (27)	1-1/8 (29)	10-21/32 (271)
VB-7213-0-4-P VB-7215-0-4-P VB-7253-0-4-P VB-7273-0-4-P	1/2” (15 mm)	3 (76)	1-1/16 (27)	1-1/8 (29)	10-21/32 (271)
	3/4“ (20 mm)	3-5/8 (92)	1-1/16 (27)	1-1/8 (29)	10-21/32 (271)
	1“ (25 mm)	4-5/8 (117)	1-1/8 (29)	1-3/16 (30)	10-23/32 (272)
	1-1/4“ (32 mm)	4-5/8 (117)	1-3/8 (35)	1-7/16 (37)	10-31/32 (279)
	1-1/2 (40 mm)	5-3/8 (137)	1-1/2 (38)	1-7/8 (48)	11-13/32 (290)
	2“(50 mm)	6-1/8 (156)	1-9/16 (40)	2-1/854)	11-21/32 (296)
VB-7214-0-4-P	1/2“	4-3/16 (106)	1-1/16 (27)	1-1/8 (29)	10-21/32 (271)
	3/4“	5-7/16 (138)	1-1/16 (27)	1-1/8 (29)	10-21/32 (271)
	1“	6-5/8 (168)	1-1/8 (29)	1-3/16 (30)	10-23/32 (272)
	1-1/4“	6-13/16 (173)	1-3/8 (35)	1-7/16 (37)	10-31/32 (279)
	1-1/2“	8-5/16 (211)	1-1/2 (38)	1-7/8 (48)	11-13/32 (290)
	2“	9-3/16 (233)	1-9/16 (40)	2-1/854)	11-21/32 (296)
VB-7221-0-4-P	1/2”	4-3/16 (106)	1-1/4 (32)	1-1/8 (29)	10-21/32 (271)
	3/4”	4-15/16 (125)	1-1/4 (32)	1-1/8 (29)	10-21/32 (271)
	1”	6 (152)	1-3/4 (45)	1-3/16 (30)	10-23/32 (272)
	1-1/4”	6-1/4 (159)	1-3/4 (45)	1-7/16 (37)	10-31/32 (279)
VB-7222-0-4-P	5/8” OD	4 (102)	1-1/4 (32)	1-1/8 (29)	10-21/32 (271)
VB-7223-0-4-P VB-7225-0-4-P VB-7263-0-4-P VB-7283-0-4-P	1/2” (15 mm)	3-1/16 (78)	1-3/16 (30)	1-1/8 (29)	10-21/32 (271)
	3/4“ (20 mm)	3-5/8 (92)	1-3/16 (30)	1-1/8 (29)	10-21/32 (271)
	1“ (25 mm)	4-5/8 (117)	1-3/4 (44)	1-3/16 (30)	10-23/32 (272)
	1-1/4“ (32 mm)	4-5/8 (117)	1-3/4 (44)	1-7/16 (37)	10-31/32 (279)
	1-1/2 (40 mm)	5-3/8 (137)	1-13/16 (46)	1-9/16 (40)	11-3/32(282)
	2“ (50 mm)	6-1/8 (156)	2-1/4 (57)	1-5/8 (42)	11-5/32 (283)
VB-7224-0-4-P	1/2”	4-3/16 (106)	1-1/4 (32)	1-1/8 (29)	10-21/32 (271)
	3/4”	5-7/16 (138)	1-1/4 (32)	1-1/8 (29)	10-21/32 (271)
	1”	6-5/8 (168)	1-3/4 (45)	1-3/16 (30)	10-23/32 (272)
	1-1/4”	6-13/16 (173)	1-3/4 (45)	1-7/16 (37)	10-31/32 (279)
	1-1/2”	8-5/16 (211)	1-13/16 (45)	1-9/16 (40)	11-3/32(282)
	2”	9-3/16 (233)	2-1/16 (53)	1-5/8 (42)	11-5/32 (283)

[a] Assembly height, centerline of valve body to top of actuator (see Figure-1). Leave an additional 3” (76 mm) clearance for cover removal.

© Copyright 2008 TAC. All rights reserved.

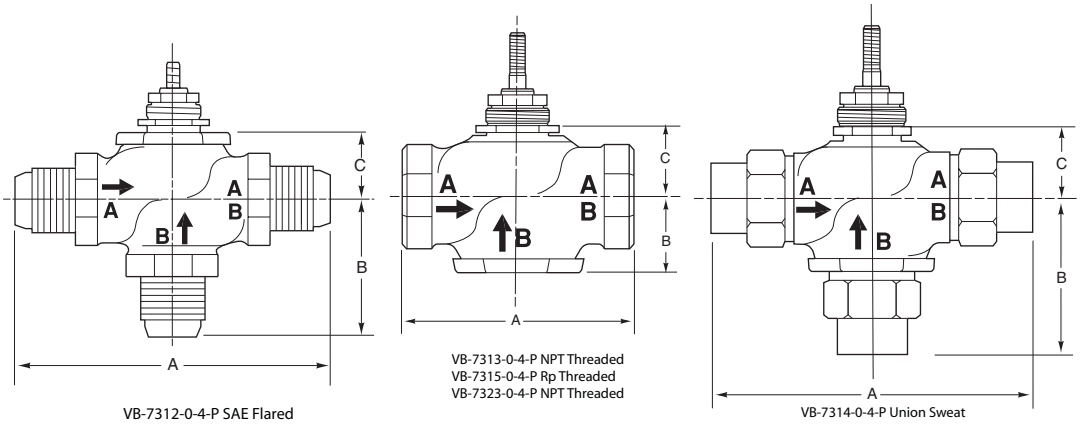

Figure-3 Three-Way VB-73xx Valve Body Dimensions

Table-10 Dimensions — Three-Way Valves (see Figure-1 and Figure-3)

Valve Body Part Number	Size	Dimensions in Inches (mm)			
		A	B	C	D [a]
VB-7312-0-4-P	5/8" OD	4 (102	2-1/4 (57)	1-1/8 (29)	10-21/32 (271)
VB-7313-0-4-P VB-7315-0-4-P	1/2" (15 mm)	3-1/16 (76)	1-3/4 (44)	1-1/8 (29)	10-21/32 (271)
	3/4"" (20 mm)	3-5/8 (92)	1-13/16 (46)	1-1/8 (29)	10-21/32 (271)
	1" (25 mm)	4-5/8 (118)	1-3/4 (44)	1-3/16 (30)	10-23/32 (272)
	1-1/4" (32 mm)	4-5/8 (118)	1-3/4 (44)	1-7/16 (37)	10-31/32 (279)
	1-1/2" (40 mm)	5-3/8 (137)	1-13/16 (46)	1-9/16 (40)	11-3/32(282)
	2" (50 mm)	6-1/8 (156)	2-1/4 (57)	1-5/8 (42)	11-5/32 (283)
VB-7314-0-4-P	1/2"	4-3/16 (106)	2-5/16 (59)	1-1/8 (29)	10-21/32 (271)
	3/4"	5-7/16 (138)	2-5/8 (67)	1-1/8 (29)	10-21/32 (271)
	1"	6-5/8 (168)	3-3/16 (81)	1-3/16 (30)	10-23/32 (272)
	1-1/4"	6-13/16 (173)	3-7/16 (87)	1-7/16 (37)	10-31/32 (279)
	1-1/2"	8-5/16 (211)	3-3/4 (95)	1-9/16 (40)	11-3/32(282)
	2"	9-3/16 (233)	4-3/16 (106)	1-5/8 (42)	11-5/32 (283)
VB-7323'-0-4-P	1/2"	3-1/16 (76)	1-3/8 (35)	1-1/8 (29)	10-21/32 (271)
	3/4"	3-5/8 (92)	1-11/16 (43)	1-1/8 (29)	10-21/32 (271)
	1"	4-5/8 (118)	1-9/16 (40)	1-3/16 (30)	10-23/32 (272)
	1-1/4"	4-5/8 (118)	1-5/8 (41)	1-7/16 (37)	10-31/32 (279)
	1-1/2"	5-3/8 (137)	1-11/16 (43)	1-9/16 (40)	11-3/32(282)
	2"	6-1/8 (156)	1-7/8 (48)	1-5/8 (42)	11-5/32 (283)

[a] Assembly height, centerline of valve body to top of actuator (see Figure-1). Leave an additional 3" (76 mm) clearance for cover removal.

© Copyright 2008 TAC. All rights reserved.

VB-8000 Series
VB-9313 Series

TAC™ VB-8000 Series and VB-9000 Series
2-1/2" to 6" Globe Valves with
TAC Forta M800A and M1500A Actuators

Selection Guide

Applications

TAC Forta M800A, and M1500A series linear actuators mount directly onto 2-1/2" to 6" VB-8xxx series and VB-9313 series two-way and three-way globe flanged valve bodies. Applications include chilled or hot water and steam. Field selectable input signals include reverse and direct acting, floating or proportional 0-10 Vdc, 2-10 Vdc or 4-20 mA, and proportional sequencing input signal ranges.

Applicable Literature

- TAC Forta M400A and M800A Installation Instructions, DIM119 (F-27506)
- TAC Forta M1500A Installation Instructions, DIM121 (F-27507)
- AV-812 Installation Instructions, F-27443
- TAC Valves catalog, F-27414
- CA-28 Control Valve Sizing, F-13755

Selection Guide Contents

Applications . . . . . page 1
Valve and Actuator Selection Procedure . . . . . page 1
TAC VB-8000 Series Valve Bodies . . . . . page 2
TAC VB-9000 Series Valve Bodies . . . . . page 3
Valve/Actuator Close-off Pressures . . . . . page 4
TAC Forta Actuator Model Chart . . . . . page 4
Ambient Temperature Restrictions . . . . . page 4
Close-off Pressure and VB-8xxx Maximum Operating Pressure Differential . . . . . page 4
Factory Valve and Actuator Assemblies . . . . . page 5
VB-8xxx and VB-9313 Valve Body Action . . . . . page 5
Forta Actuator and Valve Body Dimensions . . . . . page 6
VB-8xxx Dimensions. . . . . page 7
VB-9313 Dimensions . . . . . Page 7

Valve and Actuator Selection Procedure

1. **Determine the required flow coefficient (Cv/kvs).**
   Using the required flow and pressure drop for the application, determine the required flow coefficient (consult CA28, F-13755 if necessary).

2. **Determine valve body part number.**

   Select a flanged VB-8xxx valve body from Table-1 or a flanged VB-9313 valve body from Table-2 having the required flow coefficient, size, body pattern, end connection, and temperature/pressure ratings appropriate for the application.

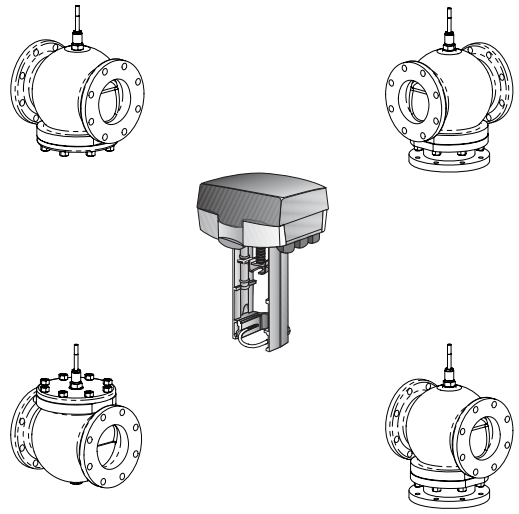

3. **Select the Forta Actuator**
   Using the required close-off pressure for the application, consult Table-5 and select a Forta actuator having sufficient close-off pressure on the valve body selected in step 2. For valve/actuator combinations using VB-8xxx valve bodies, also consult Table-5 for maximum operating pressure differential limitations. Additional Forta actuator specifications may be found in Table-3 or in the Forta Installation Instructions sheets shown in *Applicable Literature*.
   If necessary, use the dimensional information in Figure-1, Figure-2, Table-8, and Table-9 to confirm that the valve-actuator assembly will fit in the available space.

4. **Determine Assembly Part Number**
   If a complete factory valve and actuator assembly is required, consult Table-3 for the actuator code of the Forta actuator selected in Step 3. For the complete assembly part number:
   - Change the valve body part number prefix from VB to VU.
   - Insert the actuator code in the third field of the part number.
   - Confirm the factory assembly is available in Table-6

   Example:
   - Valve body: VB-8213-0-4-14
   - Actuator: M1500A (actuator code 686 from Table-3)
   - Complete assembly: VU-8213-686-4-14

Forta actuators are field configured for the desired control signal type and range plus the desired action. Consult the appropriate Forta Installation Instructions for further information (see *Applicable Literature*).

© Copyright 2008 TAC. All rights reserved.

Valve Body and Actuator Selection

Table-1 TAC VB-8213, VB-8223, and VB-8303 Valve Bodies

		Application			
		Chilled or Hot Water, Steam		Chilled or Hot Water	
		Two-Way Flanged		Three-Way Flanged	
Two-Way and Three-Way Valves • Two-way Stem Up Open or Stem Up Closed • Three-way Mixing/Diverting • ASA 125 Flanged • Cast Iron Body		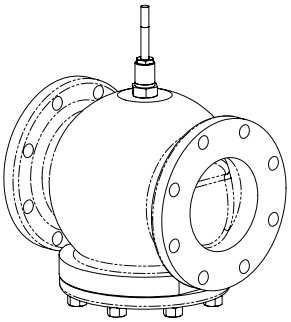	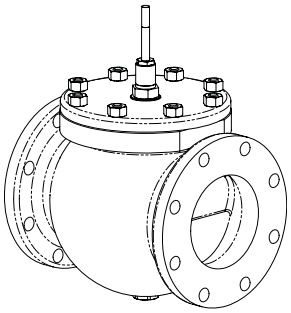	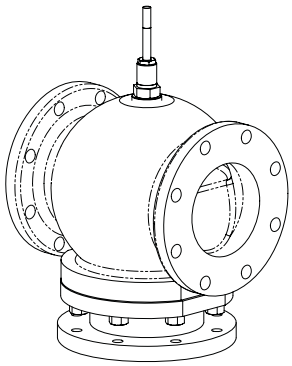	
Size		2-1/2” to 6”	2-1/2” to 6”	2-1/2” to 6”	
Valve Body Part Number		**VB-8213-0-5-P**	**VB-8223-0-5-P**	**VB-8303-0-5-P**	
Valve Body Action		2-Way Stem Open	2-Way Stem Up Closed	3-Way Mixing/Diverting[a]	
Linkage Kit Part Number		AV-812 [b]			
Material	**Flow Type**	Equal %	Equal %	Modifier Linear	
	Body	Cast Iron	Cast Iron	Cast Iron	
	Seat	Forged Brass	Forged Brass	Forged Brass	
	Stem	Stainless Steel	Stainless Steel	Stainless Steel	
	Plug	Forged Brass	Forged Brass	Forged Brass	
	Packing	Spring Loaded TFE/EPDM	Spring Loaded TFE/EPDM	Spring Loaded TFE/EPDM	
	Seat Ring	EPDM	EPDM	None	
ANSI Pressure Class, psig		125			
Maximum Inlet Pressure Steam psig (kPa)		35 psig (241 kPa)		—	
Allowable Control Media Temperature, °F (°C)[c]		20°F to 281°F (–7°C to 138°C)			
Close-Off Pressure, psi (kPa)		125 psi (856 kPa) [d]		35 psi (241 kPa) [d]	
P Code	**Valve Size, In.**	C_v (k_{vs})		C_v (k_{vs}) Mixing[e]	C_v (k_{vs}) Diverting [f]
12	**2-1/2**	56 (48)	56 (48)	80 (69)	95 (82) [g] 115 (99) [h]
13	**3**	85 (74)	85 (74)	110 (95)	120 (104) [i]
14	**4**	145 (125)	145 (125)	190 (164)	190 (164) [i]
15	**5**	240 (208)	240 (208)	290 (251)	290 (251) [i]
16	**6**	370 (320)	370 (320)	500 (433)	500 (433) [i]

[a] VB-8303 valves may be used as either mixing or diverting valves. VB-8303 valves will also operate satisfactorily as two-way angle valves if either end (side) port is closed off.
[b] AV-812 linkage kit included with M1500 actuator. Purchase separately for M800A actuators.
[c] CAUTION: Freeze protection required for temperatures below 32°F (0 °C). Avoid ice formation on stems.
[d] Valve in closed position. See Table-5 for maximum allowable VB-8xxx differential pressure for valve in any open position.
[e] Mixing configuration, ports A and B are inlets, port AB is outlet. Port AB located on bottom.
[f] Diverting configuration, port AB is inlet, ports A and B are outlets. Port AB located on bottom.
[g] Diverting configuration, flow AB to A ports.
[h] Diverting configuration, flow AB to B ports.
[i] All diverting flow configurations, flow AB to either A or B ports.

© Copyright 2008 TAC. All rights reserved.

Table-2 TAC VB-9313 Valve Bodies

		Application
		Chilled or Hot Water
Three-Way Valves • Three-way mixing • ANSI 125 Flanged • Cast Iron Body		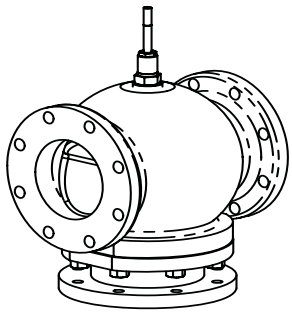
		ASA Flanged
Size		2-1/2” to 6”
Valve Body Part Number		**VB-9313-0-5-P**
Linkage Kit Part Number		AV-812[a]
Material	**Flow Type**	Mixing [b]
	Body	Cast Iron
	Seat	Cast Iron
	Stem	Stainless Steel
	Plug	Brass
	Packing	Spring Loaded TFE/EPDM
	Disc	None
ANSI Pressure Class, psig		125
Allowable Control Media Temperature, °F (°C)[c]		40°F to 281°F (4°C to 138°C)
Allowable Differential Pressure, Water, psi (kPa) [d]		35 psi (241 kPa)
P Code	**Valve Size, In.**	**C_v (k_{vs}) Rating**
12	**2-1/2**	67 (58)
13	**3**	91 (79)
14	**4**	170 (147)
15	**5**	290 (251)
15	**6**	390 (337)

[a] AV-812 linkage kit included with M1500 actuator. Purchase separately for M800A actuators.

[b] Port AB is the common port, ports A and B are inlets. Flow is from B to AB when valve stem is in up position (port A closed). Flow is from port A to AB when valve stem is down (port B closed). Common port AB is on the side.

[c] CAUTION: Freeze protection required for temperatures below 32°F (0 °C). Avoid ice formation on stems.

[d] Maximum recommended differential in full open position. Do not exceed recommended differential pressure (pressure drop) or integrity of parts may be affected.

© Copyright 2008 TAC. All rights reserved.

Table-3 TAC Forta Actuator Model Chart

Model	Actuator Code	Force, lbf (N)	Power	Running VA	Transformer Sizing VA	Floating Control [a]	Proportional Control [a]	Feedback	(2) SPDT Auxiliary Switches	Linkage
M800A	680	180 (800)	24 Vac ±10% 50/60 Hz	15	50	Yes	0-10 Vdc, 2-10 Vdc, or 4-20 mAdc	2-10 Vdc	No	AV-812 (purchase separately)
M800A-S2	— [b]								24 Vac 4A	
M1500A	686	337 (1500)		15	50				No	
M1500A-S2	— [b]								24 Vac 4A	

[a] DIP switch selectable
[b] No actuator code. No factory assemblies offered.

Table-4 Ambient Temperature Restrictions for Forta Valve Actuators

Fluid Temperature in Valve Body	Maximum Allowable Ambient Temperature[a]
Chilled Water	122°F (50°C)
281°F (138°C)	113°F (45°C)
300°F (149°C)	107°F (42°C)
340°F (171°C)	100°F (38°C)
366°F (186°C)	90°F (32°C)

[a] Minimum allowable ambient operating temperature 14°F (-10°C)

Note: When installing valve and actuator assemblies, observe the minimum and maximum fluid and ambient temperature limits shown in Table-1, Table-2, and Table-4.

© Copyright 2008 TAC. All rights reserved.

Table-5 Select Valve/Actuator Combination Having Sufficient Close-off for Application

			Close-off Ratings, psi (kPa)		Maximum Operating Pressure Differential, psi (kPa)
Valve Body	**P Code**	**Size**	**M800A M800A-S2[a]**	**M1500A M1500A-S2[a]**	**M1500A M1500A-S2 [a]**
VB-8213-0-5-P VB-8223-0-5-P	-12, -13, -14, -15, -16	2-1/2” to 6”	Do Not Use [b]	125 (856)	35 (241) [c]
VB-8303-0-5-P				35 (241)	
VB-9313-0-5-P	-12	2-1/2”	29 (199)	61 (418)	
	-13	3”	19 (130)	42 (288)	
	-14	4”	10 (68)	22 (151)	
	-15	5”	—	14 (96)	
	-16	6”	—	9 (62)	

Note: Do **not** use M400A or M400A-S2 actuators on 2-1/2” to 6” VB-8xxx or VB-9313 valve bodies.

[a] AV-812 linkage adapter kit required for mounting (order separately).
[b] M800A and M800A-S2 actuators are **not** compatible with VB-8xxx valve bodies.
[c] Maximum differential in any open position. For proper VB-8xxx valve operation, do **not** exceed Maximum Operating Pressure Differential.

Factory Assemblies

Table-6 Factory Valve and Actuator Assemblies

VB-8000 Series Valve Assembly Part Number	P Code [a]	Size	Actuator Model (Actuator Code [b])	VB-9313 Series Valve Assembly Part Number	P Code	Size	Actuator Model (Actuator Code [b])	
			M1500A (686)				M800A (680)	M1500A (686)
VU-8213-xxx-5-P VU-8303-xxx-5-P	12	2-1/2”	X	VU-9313-xxx-5-P	12	2-1/2”	X	X
	13	3”	X		13	3”	X	X
	14	4”	X		14	4”	X	X
	15	5”	X		15	5”	—	X
	16	6”	X		16	6”	—	X

[a] Insert P code in last field of assembly part number.
[b] Insert actuator code in third field of assembly part number.

Table-7 VB-8xxx and VB-9313 Valve Body Action

Valve Body/ Valve Assembly	Valve Body Description	Stem Up Position	Action (As actuator strokes and valve stem goes down)
VB-8213-0-5-P VU-8213-xxx-5-P	Two-Way Stem up open	Valve open	A to AB flow decreases
VB-8223-0-5-P	Two-way stem up closed	Valve closed	A to AB flow increases
VB-8303-0-5-P VU-8303-xxx-5-P	Three-way mixing	Flow B to AB	B to AB flow decreases A to AB flow increases (common port bottom)
	Three-way diverting	Flow AB to B	AB to B flow decreases AB to A flow increases (common port bottom)
VB-9313-0-5-P VU-9313-xxx-5-P	Three-way mixing	Flow B to AB	B to AB flow decreases A to AB flow increases (common port side)

© Copyright 2008 TAC. All rights reserved.

Dimensions

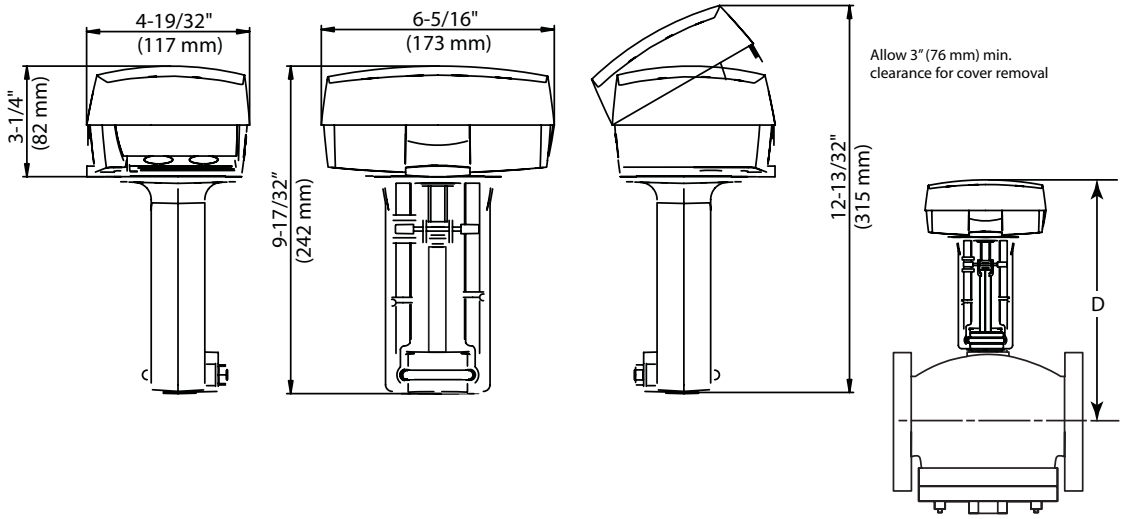

Figure-1 Forta Actuator Dimensions

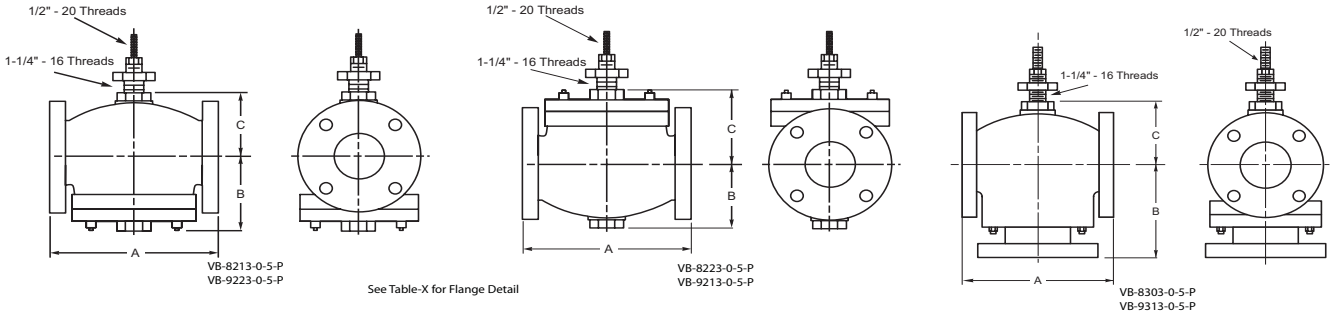

Flange Dimensions

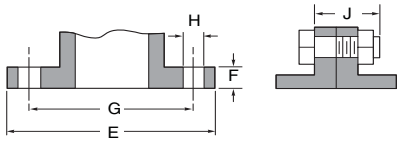

Nominal Pipe Size	Flanges		Drilling		Bolting		Length of Machine Bolts J
	Flange Diameter E	Flange Thickness F	Diameter of Bolt Circle G	Diameter of Bolt Holes H	Number of Bolts	Diameter of Bolts	
2-1/2	7"	11/16"	5-1/2"	3/4"	4	5/8"	2-1/2"
3	7-1/2"	3/4"	6"				
4	9"	15/16"	7-1/2"		8		3"
5	10"	15/16"	8-1/2"	7/8"		3/4"	
6	11"	1"	9-1/2"				3-1/4"

Figure-2 VB-8xxx and VB-9xxx Valve Body and Flange Dimensions

© Copyright 2008 TAC. All rights reserved.

Table-8 VB-8xxx Dimensions (see Figure-1 and Figure-2)

Valve Body Part Number	Size, Inches	Dimensions in Inches (mm) [a]			
		A	B	C	D [b]
VB-8213-0-5-P	2-1/2	8-9/16 (217)	4 (102)	3-3/8 (86)	9-17/32 (242)
	3	9-1/2 (241)	4-5/8 (117)	3-3/4 (95)	9-17/32 (242)
	4	11-1/2 (292)	5-1/2 (140)	4-1/2 (114)	9-17/32 (242)
	5	13 (330)	6-15/16 (176)	5-13/16 (148)	9-17/32 (242)
	6	14 (356)	7-1/2 (191)	9-3/16 (233)	9-17/32 (242)
VB-8223-0-5-P	2-1/2	8-9/16 (217)	4 (102)	3-11/16 (94)	9-17/32 (242)
	3	9-1/2 (241)	4-1/4 (108)	4-1/16 (103)	9-17/32 (242)
	4	11-1/2 (292)	4-15/16 (125)	5-5/16 (135)	9-17/32 (242)
	5	13 (330)	5-7/16 (138)	6-11/16 (170)	9-17/32 (242)
	6	14 (356)	6-1/4 (159)	10-3/8 (264)	9-17/32 (242)
VB-8303-0-5-P	2-1/2	8-9/16 (217)	5-7/16 (138)	3-1/16 (78)	9-17/32 (242)
	3	9-1/2 (241)	6-3/8 (162)	3-11/16 (94)	9-17/32 (242)
	4	11-1/2 (292)	8-7/16 (214)	4-5/16 (110)	9-17/32 (242)
	5	13 (330)	8-13/16 (224)	5-5/8 (143)	9-17/32 (242)
	6	14 (356)	9-3/4 (248)	9 (229)	9-17/32 (242)

[a] See Figure-2 for flange dimensions
[b] Assembly height, centerline of valve body to top of actuator (see Figure-1). Leave an additional 3” (76 mm) clearance for cover removal.

Table-9 VB-9313 Dimensions (see Figure-1 and Figure-2)

Valve Body Part Number	Size, Inches	Dimensions in Inches (mm) [a]			
		A	B	C	D [b]
VB-9313-0-5-P	2-1/2	8-9/16 (217)	5-3/8 (137)	3-1/2 (89)	9-17/32 (242)
	3	9-1/2 (241)	6-3/8 (162)	3-3/4 (95)	9-17/32 (242)
	4	11-1/2 (292)	8-1/2 (216)	4-1/2 (114)	9-17/32 (242)
	5	13 (330)	8-3/4 (222)	5 (127)	9-17/32 (242)
	6	14 (356)	9-3/4 (248)	5-7/8 (149)	9-17/32 (242)

[a] See Figure-2 fo flange dimensions.
[b] Assembly height, centerline of valve body to top of actuator (see Figure-1). Leave an additional 3” (76 mm) clearance for cover removal.

© Copyright 2008 TAC. All rights reserved.

Copyright 2008, TAC
All brand names, trademarks and registered trademarks are the property of their respective owners. Information contained within this document is subject to change without notice.

F-27491-2

TAC
1354 Clifford Avenue
P.O. Box 2940
Loves Park, IL 61132-2940
www.tac.com

by Schneider Electric